MODEL: SA16
Air Conditioners

FORM NO. ARR-222 REV. 2

Russell™ By Rheem SA16 Air Conditioners

- **Efficiencies 16 SEER/13 EER**
- **Nominal Sizes 1½ to 5 Ton [5.28 to 17.6 kW]**
- **Cooling Capacities 17.3 to 60.5 kBTU [5.7 to 17.7 kW]**

"Proper sizing and installation of equipment is critical to achieve optimal performance. Split system air conditioners and heat pumps must be matched with appropriate coil components to meet Energy Star. Ask your Contractor for details or visit **www.energystar.gov**."

- **Composite base pan** – dampens sound, captures louver panels, eliminates corrosion and reduces number of fasteners needed
- **Powder coat paint system** – for a long lasting professional finish
- **Scroll compressor** – uses 70% fewer moving parts for higher efficiency and increased reliability
- **Modern cabinet aesthetics** – increased curb appeal with visually appealing design
- **Curved louver panels** – provide ultimate coil protection, enhance cabinet strength, and increased cabinet rigidity
- **Optimized fan orifice** – optimizes airflow and reduces unit sound
- **Rust resistant screws** – confirmed through 1500-hour salt spray testing
- **Service valve has between 3"-4"-5" valve space** – provides a minimum working area of 27-square inches for easier access
- **15" wide, industry leading corner service access** – makes repairs easier and faster.
- **Diagnostic service window with two-fastener opening** – provides access to the high and low pressure.
- **External gauge port access** – allows easy connection of "low-loss" gauge ports
- **Single-row condenser coil** – makes unit lighter and allows thorough coil cleaning to maintain "out of the box" performance
- **35% fewer cabinet fasteners and fastener-free base** – allow for faster access to internal components and hassle-free panel removal
- **Service trays** – hold fasteners or caps during service calls
- **QR code** – provides technical information on demand for faster service calls
- **Fan Motor Harness With Extra Long Wires** allows unit top to be removed without disconnecting fan wire.

TABLE OF CONTENTS

Standard Feature 3
Available SKUs 3
Features & Benefits 4-5
Model Number Identification 6
General Data/Electrical Data 7
Accessories 8
Weighted Sound Power 8
Unit Dimensions 9
Clearances 10
Wiring Diagrams 11
Application Guidelines 11
Refrigerant Line Size Information 12-15
Performance Data 16
Guide Specifications 17
Limited Warranty 18

Standard Feature Table

STANDARD FEATURES							
Feature	**18**	**24**	**30**	**36**	**42**	**48**	**60**
R-410a Refrigerant	√	√	√	√	√	√	√
Maximum SEER	16	16	16	16	16	16	16
Maximum EER	13	13	13	13	13	13	13
Scroll Compressor	√	√	√	√	√	√	√
Field Installed Filter Drier	√	√	√	√	√	√	√
Front Seating Service Valves	√	√	√	√	√	√	√
Internal Pressure Relief Valve	√	√	√	√	√	√	√
Internal Thermal Overload	√	√	√	√	√	√	√
Long Line capability	√	√	√	√	√	√	√
Low Ambient capability with Kit	√	√	√	√	√	√	√
3-4-5 Expanded Valve Space	√	√	√	√	√	√	√
Composite Basepan	√	√	√	√	√	√	√
2 Screw Control Box Access	√	√	√	√	√	√	√
15" Access to Internal Components	√	√	√	√	√	√	√
Quick release louver panel design	√	√	√	√	√	√	√
No fasteners to remove along bottom	√	√	√	√	√	√	√
Optimized Venturi Airflow	√	√	√	√	√	√	√
Single row condenser coil	√	√	√	√	√	√	√
Powder coated paint	√	√	√	√	√	√	√
Rust resistant screws	√	√	√	√	√	√	√
QR code	√	√	√	√	√	√	√
External gauge ports	√	√	√	√	√	√	√
Service trays	√	√	√	√	√	√	√

√ = Standard

Available SKUs

Available Models	Description
SA1618AJ1NA	1 1/2 ton 16 SEER Single-Stage Air Conditioner-208/230/1/60
SA1618AJ1NB	1 1/2 ton 16 SEER Single-Stage Air Conditioner w/ High/Low Pressure-208/230/1/60
SA1624AJ1NA	2 ton 16 SEER Single-Stage Air Conditioner-208/230/1/60
SA1624AJ1NB	2 ton 16 SEER Single-Stage Air Conditioner w/ High/Low Pressure-208/230/1/60
SA1630AJ1NA	2 1/2 ton 16 SEER Single-Stage Air Conditioner-208/230/1/60
SA1630AJ1NB	2 1/2 ton 16 SEER Single-Stage Air Conditioner w/ High/Low Pressure-208/230/1/60
SA1636AC1NB	3 ton 16 SEER Single-Stage Air Conditioner w/ High/Low Pressure-208/230/1/60
SA1636AJ1NA	3 ton 16 SEER Single-Stage Air Conditioner-208/230/1/60
SA1636AJ1NB	3 ton 16 SEER Single-Stage Air Conditioner w/ High/Low Pressure-208/230/1/60
SA1636BC1NB (Canada)	3 ton 16 SEER Single-Stage Air Conditioner w/ High/Low Pressure-208/230/1/60
SA1642AC1NB	3 1/2 ton 16 SEER Single-Stage Air Conditioner w/ High/Low Pressure-208/230/1/60
SA1642AJ1NA	3 1/2 ton 16 SEER Single-Stage Air Conditioner-208/230/1/60
SA1642AJ1NB	3 1/2 ton 16 SEER Single-Stage Air Conditioner w/ High/Low Pressure-208/230/1/60
SA1648AC1NB	4 ton 16 SEER Single-Stage Air Conditioner w/ High/Low Pressure-208/230/1/60
SA1648AJ1NA	4 ton 16 SEER Single-Stage Air Conditioner-208/230/1/60
SA1648AJ1NB	4 ton 16 SEER Single-Stage Air Conditioner w/ High/Low Pressure-208/230/1/60
SA1660AC1NB	5 ton 16 SEER Single-Stage Air Conditioner w/ High/Low Pressure-208/230/1/60
SA1660AJ1NA	5 ton 16 SEER Single-Stage Air Conditioner-208/230/1/60
SA1660AJ1NB	5 ton 16 SEER Single-Stage Air Conditioner w/ High/Low Pressure-208/230/1/60

Introduction to SA16 Air Conditioner

The SA16 is our 16 SEER air conditioner and is part of the Russell™ By Rheem air conditioner product line that extends from 13 to 20 SEER. This highly featured and reliable air conditioner is designed for years of reliable, efficient operation when matched with Russell™ By Rheem indoor aluminum evaporator coils and furnaces or air handler units with aluminum evaporators.

Our unique composite base (1) reduces sound emission, eliminates rattles, significantly reduces fasteners, eliminates corrosion and has integrated brass compressor attachment inserts (2). Furthermore it has incorporated into the design, water management features, means for hand placement (3) for unit maneuvering, screw trays (4) and inserts for lifting off unit pad. (5)

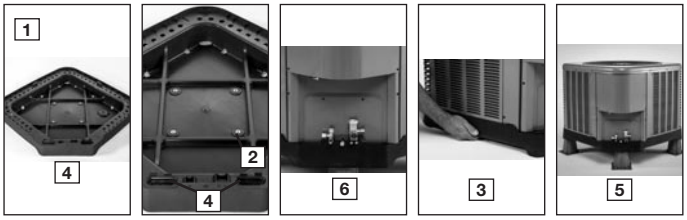

Service Valves (6) are rigidly mounted in the composite base with 3" between suction and discharge valves, 4" clearance below service valves and a minimum of 5" above the service valves, creating industry leading installation ease. The minimum 27 square-inches around the service valves allows ample room to remove service valve schrader prior to brazing, plenty of clearance for easy brazing of the suction and discharge lines to service valve outlets, easy access and hookup of low loss refrigerant gauges (7), and access to the service valve caps for opening. For applications with long-line lengths up to 250 feet total equivalent length, up to 200 feet condenser above evaporator, or up to 80 feet evaporator above condenser, the long-line instructions in the installation manual should be followed.

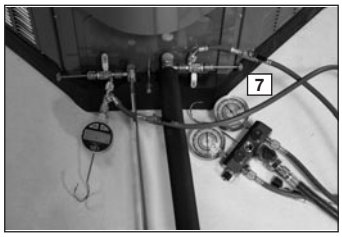

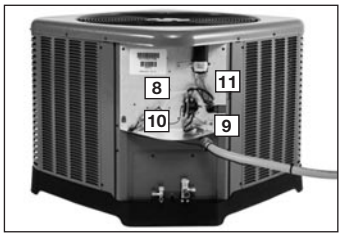

Controls are accessed from the corner of the unit by removing only two fasteners from the control access cover, revealing the industry's largest 15" wide and 14" tall control area (8). With all this room in the control area the high voltage electrical whip (9) can easily be inserted through the right size opening in the bottom of the control area. Routing it leads directly to contractor lugs for connection. The low voltage control wires (10) are easily connected to units low voltage wiring. If contactor or capacitor (11) needs to be replaced there is more than adequate space to make the repair. Furthermore, if high pressure and low pressure model was not purchased but is desired to be installed in the field, the service window (12) can be removed by removing two screws, to access the high and low side schrader fittings for easy field installation. The entire corner can be removed providing ultimate access to install the high and low pressure switch. (13)

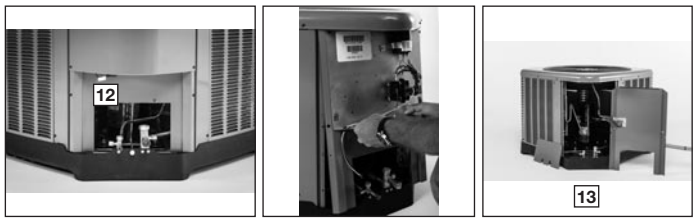

If in the rare event, greater access is needed to internal components, such as the compressor, the entire corner of the unit can be removed along with the top cover assembly to have unprecedented access to interior of the unit (14). Extra wire length is incorporated into each outdoor fan and compressor so top cover and control panel can be positioned next to the unit. With minimal effort the plug can be removed from the compressor and the outdoor fan wires can be removed from the capacitor to allow even more uncluttered access to the interior of the unit (15). Outdoor coil heights range from as short as 27" to 48", aiding access to the compressor. Disassembly to this degree and complete reassembly only takes a first time service technician less than 10 minutes. (15)

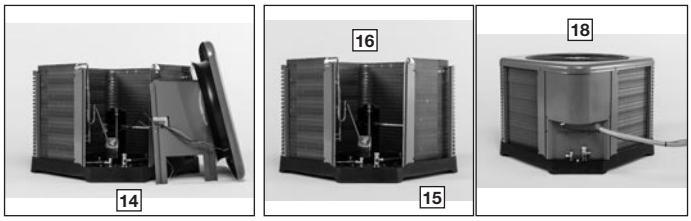

All units utilize strong formed louver panels which provide industry leading coil protection. Louver removal for coil cleaning is accomplished by removing one screw and lifting the panel out of the composite base pan. (17) All SA16 units utilize single row coils (16) making cleaning easy and complete, restoring the performance of the air conditioner back to out of the box performance levels year after year.

The outdoor fan motor has sleeve bearings and is inherently protected. The motor is totally enclosed for maximum protection from weather, dust and corrosion. Access to the outdoor fan is made by removing four fasteners from the fan grille. The outdoor fan can be removed from the fan grille by removing 4 fasteners in the rare case outdoor fan motor fails.

Each cabinet has optimized composite (19) fan orifice assuring efficient and quiet airflow.

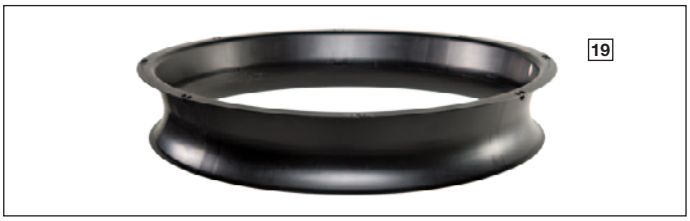

The entire cabinet has powder post paint (20) achieving 1000 hour salt spray rating, allowing the cabinet to retain its aesthetics throughout its life.

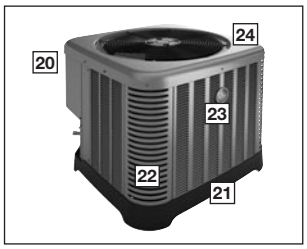

Scroll compressors with standard internal pressure relief and internal thermal overload are used on all capacities assuring longevity of high efficient and quiet operation for the life of the product.

Each unit is shipped with filter drier for field installation and will trap any moisture or dirt that could contaminate the refrigerant system.

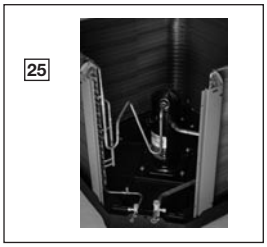

All cabinets have industry leading structural strength due to the composite base pan (21), interlocking corner post (22), formed curved louver panels (23) and drawn top cover (24) making it the most durable cabinet on the market today.

Each SA16 capacity has undergone rigorous psychometric testing to assure performance ratings of capacity, SEER and EER per AHRI Standard 210/240 rating conditions. Also each unit bears the UL mark and each unit is certified to UL 1995 safety standards.

Each unit has undergone specific strain and modal testing to assure tubing (25) is outside the units natural frequency and that the suction and discharge lines connected to the compressor withstand any starting, steady state operation or shut down forces imposed by the compressor.

All units have been sound tested in sound chamber to AHRI 270 rating conditions, and A-weighted Sound Power Level tables produced, assuring units have acceptable noise qualities (see page 9). Each unit has been ran in cooling operation at 95°F and 82°F and sound ratings for the SA16 range from as low as 70.7 dBA to 76.6 dBA.

All units have been ship tested to assure units meet stringent “over the road” shipping conditions.

As manufactured all units in the SA16 family have cooling capability to 55 °F. Addition of low ambient control will allow the unit to operate down to 0°F. Factory testing is performed on each unit. All component parts meet well defined specification and continually go through receiving inspections. Each component installed on a unit is scanned, assuring correct component utilization for a given unit capacity and voltage. All condenser coils are leak tested with pressurization test to 550#’s and once installed and assembled, each units’ complete refrigerant system is helium leak tested. All units are fully charged from the factory for up to 15 feet of piping. All units are factory run tested. The SA16 has a 10-year conditional compressor and parts warranty (registration required).

Optional Accessories
(Refer to accessory chart for model #)

Compressor Crankcase Heater
Protects against refrigerant migration that can occur during low ambient operation

Compressor Sound Cover
- Reinforced vinyl compressor cover containing a 1½ inch thick batt of fiberglass insulation
- Open edges are sealed with a one-inch wide hook and loop fastening tape

Compressor Hard Start Kit
- Single-phase units are equipped with a PSC compressor motor, this type of motor normally does not need a potential relay and start capacitor
- Kit may be required to increase the compressor starting torque, in conditions such as low voltage

Low Ambient Kit
- Air conditioners operate satisfactorily in the cooling mode down to 55°F outdoor air temperature without any additional controls
- This Kit can be added in the field enabling unit to operate properly down to 0° in the cooling mode
- Crankcase heater and freezestat should be installed on compressors equipped with a low ambient kit

3"/6"/12"
- Gray high density polyethylene feet are available to raise unit off of mounting surface away from moisture

Low Pressure
- Can be added in field enabling the unit to shut off compressor on loss of charge

NOTE: Unit can be purchased with high and low pressure installed at factory. (Refer to SKU list)

High Pressure
- Can be added in field enabling unit to shut off compressor if unit loses outdoor fan operation.

NOTE: Unit can be purchased with high and low pressure installed at factory. (Refer to SKU list)

Decorative Top
- Can be installed on fan grille

Air Conditioners*

S	A	16	24	A	J	1	N	A	*
Brand	**Product Category**	**SEER**	**Capacity BTU/HR**	**Major Series***	**Voltage**	**Type**	**Controls**	**Minor Series****	**Option Code**
Russell™ by Rheem	A - Air Conditioners	16 - 16 SEER	18 - 18,000 [5.28 kW] 24 - 24,000 [7.03 kW] 30 - 30,000 [8.79 kW] 36 - 36,000 [10.55 kW] 42 - 42,000 [12.31 kW] 48 - 48,000 [14.07 kW] 60 - 60,000 [17.58 kW]	A - 1st Design B - 2nd Design	J - 1ph, 208-230/60 C - 3ph, 208-230/60	1 - Single-stage	N - Non-Communicating	A - 1st Design B - 2nd Design	N/A

*See page 3 for available SKU's.

[ ] Designates Metric Conversions

Physical Data

PHYSICAL DATA								
Model No.	**SA1618**	**SA1624**	**SA1630**	**SA1636**	**SA1636**	**SA1642**	**SA1648**	**SA1660**
Nominal Tonnage	1.5	2.0	2.5	3.0	3.0	3.5	4.0	5.0
Valve Connections								
Liquid Line O.D. – in.	3/8	3/8	3/8	3/8	3/8	3/8	3/8	3/8
Suction Line O.D. – in.	3/4	3/4	3/4	3/4	3/4	7/8	7/8	7/8
Refrigerant (R410A) furnished oz.[1]	82	87	113	108	108	150	174	201
Compressor Type	Scroll							
Outdoor Coil								
Net face area – Outer Coil	12.1	14.8	16.2	18.8	17.29	24.2	28.3	32.3
Net face area – Inner Coil	—	—	—	—	—	—	—	—
Tube diameter – in.	3/8	3/8	3/8	3/8	3/8	3/8	3/8	3/8
Number of rows	1	1	1	1	1	1	1	1
Fins per inch	22	22	22	22	22	22	22	22
Outdoor Fan								
Diameter – in.	20	24	26	26	24	26	26	26
Number of blades	3	2	3	3	3	3	3	3
Motor hp	1/8	1/6	1/5	1/3	1/6	1/3	1/3	1/3
CFM	2405	2850	3915	4340	3300	4450	4660	4775
RPM	1095	851	710	819	825	829	828	795
watts	155	147	102	131	167	193	198	239
Shipping weight – lbs.	147	149	159	177	199	212	232	247
Operating weight – lbs.	140	142	152	170	192	205	225	240

Electrical Data

Line Voltage Data (Volts-Phase-Hz)	**208/230-1-60**	**208/230-1-60**	**208/230-1-60**	**208/230-1-60**	**208/230-1-60**	**208/230-1-60**	**208/230-1-60**	**208/230-1-60**
Maximum overcurrent protection (amps)[2]	20	20	30	35	35	40	40	50
Minimum circuit ampacity[3]	12	14	18	23	23	25	25	34
Compressor								
Rated load amps	9	10.3	12.8	15.4	15.4	16.7	17	23.7
Locked rotor amps	47.5	61.6	67.3	83.9	83.9	109	123.9	152.5
Condenser Fan Motor								
Full load amps	0.7	0.6	2.8	3.5	1.5	3.5	3.5	3.5
Locked rotor amps	1.3	1.5	2.3	—	.8	—	2.3	—
Line Voltage Data (Volts-Phase-Hz)	—	—	—	208/230-3-60	208/230-3-60	208/230-3-60	208/230-3-60	208/230-3-60
Maximum overcurrent protection (amps)[2]	—	—	—	25	20	25	30	35
Minimum circuit ampacity[3]	—	—	—	17	14	18	21	24
Compressor								
Rated load amps	—	—	—	10.4	10.4	11.2	13.6	15.9
Locked rotor amps	—	—	—	73	73	88	83.1	110
Condenser Fan Motor								
Full load amps	—	—	—	3.5	.8	3.5	3.5	3.5
Locked rotor amps	—	—	—	—	1.5	—	2.3	—

[1]Refrigerant charge sufficient for 15 ft. length of refrigerant lines. For longer line set requirements see the installation instructions for information about set length and additional refrigerant charge required.
[2]HACR type circuit breaker of fuse.
[3]Refer to National Electrical Code manual to determine wire, fuse and disconnect size requirements.

Accessories

Model No.		SA1618	SA1624	SA1630	SA1636	SA1642	SA1648	SA1660
Compressor crankcase heater*		44-17402-44	44-17402-44	44-17402-44	44-17402-44	44-17402-45	44-17402-45	44-17402-45
Low ambient control		RXAD-A08	RXAD-A08	RXAD-A08	RXAD-A08	RXAD-A08	RXAD-A08	RXAD-A08
Compressor sound cover		68-23427-26	68-23427-26	68-23427-26	68-23427-26	68-23427-25	68-23427-25	68-23427-25
Compressor hard start kit		SK-A1	SK-A1	SK-A1	SK-A1	SK-A1	SK-A1	SK-A1
Low pressure control		RXAC-A07	RXAC-A07	RXAC-A07	RXAC-A07	RXAC-A07	RXAC-A07	RXAC-A07
High pressure control		RXAB-A07	RXAB-A07	RXAB-A07	RXAB-A07	RXAB-A07	RXAB-A07	RXAB-A07
Liquid Line Solenoid (24 VAC, 50/60 Hz)	Solenoid Valve	200RD2T3TVLC	200RD2T3TVLC	200RD2T3TVLC	200RD2T3TVLC	200RD2T3TVLC	200RD3T3TVLC	200RD3T3TVLC
	Solenoid Coil	61-AMG24V	61-AMG24V	61-AMG24V	61-AMG24V	61-AMG24V	61-AMG24V	61-AMG24V
Liquid Line Solenoid (120/240 VAC, 50/60 Hz)	Solenoid Valve	200RD2T3TVLC	200RD2T3TVLC	200RD2T3TVLC	200RD2T3TVLC	200RD2T3TVLC	200RD3T3TVLC	200RD3T3TVLC
	Solenoid Coil	61-AMG120/240V	61-AMG120/240V	61-AMG120/240V	61-AMG120/240V	61-AMG120/240V	61-AMG120/240V	61-AMG120/240V
Classic Top Cap w/Label		91-101123-21	91-101123-21	91-101123-21	91-101123-21	91-101123-21	91-101123-21	91-101123-21

*Crankcase Heater recommended with Low Ambient Kit.

Weighted Sound Power Level (dBA)

Unit Size - Voltage, Series	Standard Rating (dBA)	TYPICAL OCTAVE BAND SPECTRUM (dBA without tone adjustment)						
		125	250	500	1000	2000	4000	8000
SA1618	76.6	53.4	60	65.7	66.3	64.2	58.8	52.6
SA1624	75.5	49.9	58.4	61.4	64.1	61.6	57.3	50.8
SA1630	74.3	48.4	57.4	62.6	64.5	61.5	56.5	51.5
SA1636	76.4	54.5	62.7	67.1	66.5	62.7	58.5	54.3
SA1636	75	56.1	58.7	63.1	66.1	62.3	59	55.7
SA1642	70.7	47.5	51	60.2	60.7	59.7	53.6	50.4
SA1648	74.3	51.2	56.1	64.5	65.6	60.7	56.6	52.6
SA1660	74.6	50.1	55.1	65.6	64.8	63.2	57.4	56.4

NOTE: Tested in accordance with AHRI Standard 270-08 (not listed in AHRI)

Unit Dimensions

MODEL NO.	OPERATING						SHIPPING					
	H (Height)		L (Length)		W (Width)		H (Height)		L (Length)		W (Width)	
	INCHES	mm	INCHES	mm	INCHES	mm	INCHES	mm	INCHES	mm	INCHES	mm
SA1618	27	685	29.75	755	29.75	755	27.375	695	32.25	819	32.25	819
SA1624	27	685	33.75	857	33.75	857	27.375	695	36.25	921	36.25	921
SA1630	27	685	35.75	908	35.75	908	27.375	695	38.25	972	38.25	972
SA1636	31	787	35.75	908	35.75	908	31.375	797	38.25	972	38.25	972
SA1636	31	787	33.75	857	33.75	857	31.375	797	36.25	921	36.25	921
SA1642	39	990	35.75	908	35.75	908	39.375	1000	38.25	972	38.25	972
SA1648	45	1143	35.75	908	35.75	908	45.375	1153	38.25	972	38.25	972
SA1660	51	1295	35.75	908	35.75	908	51.375	1305	38.25	972	38.25	972

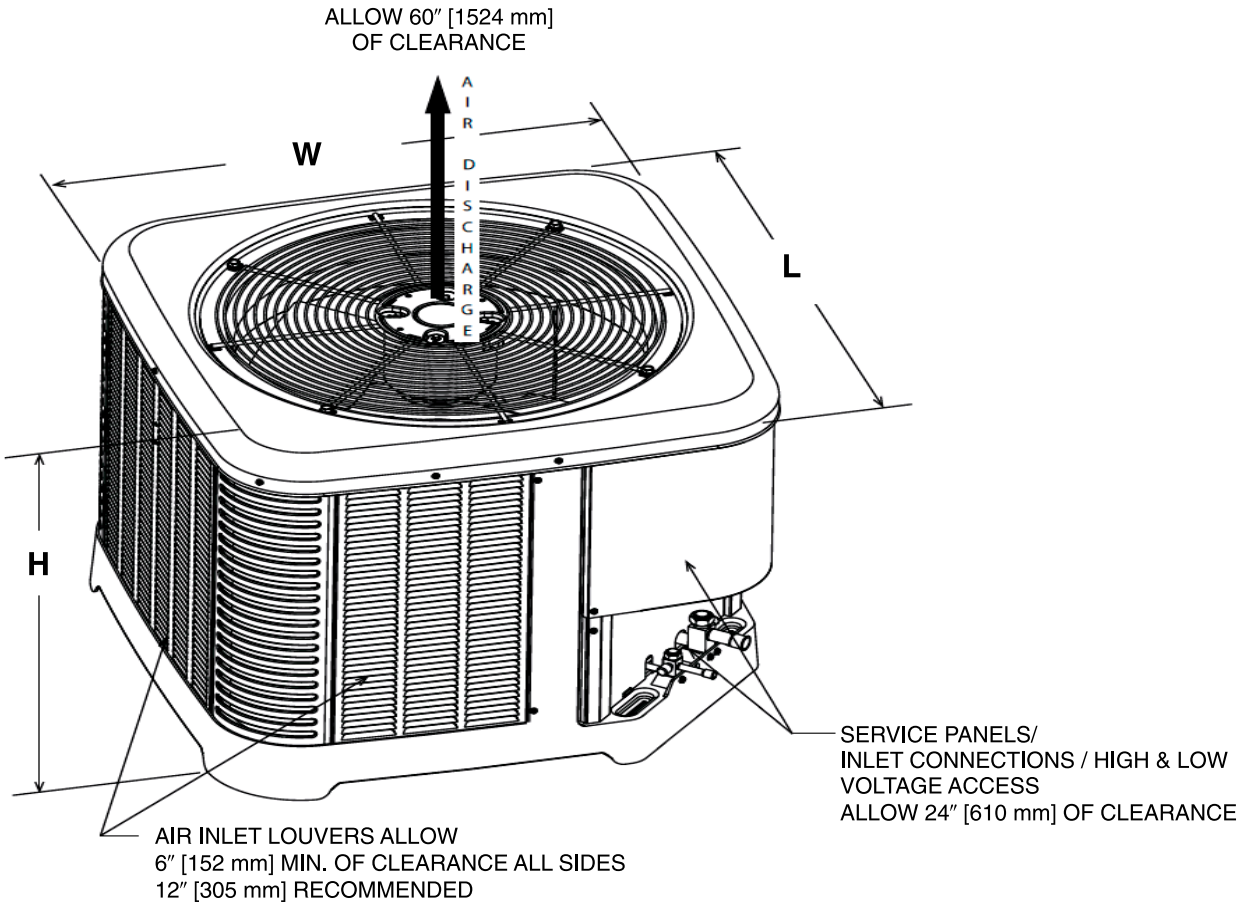

[ ] Designates Metric Conversions

ST-A1226-02-00

CLEARANCES

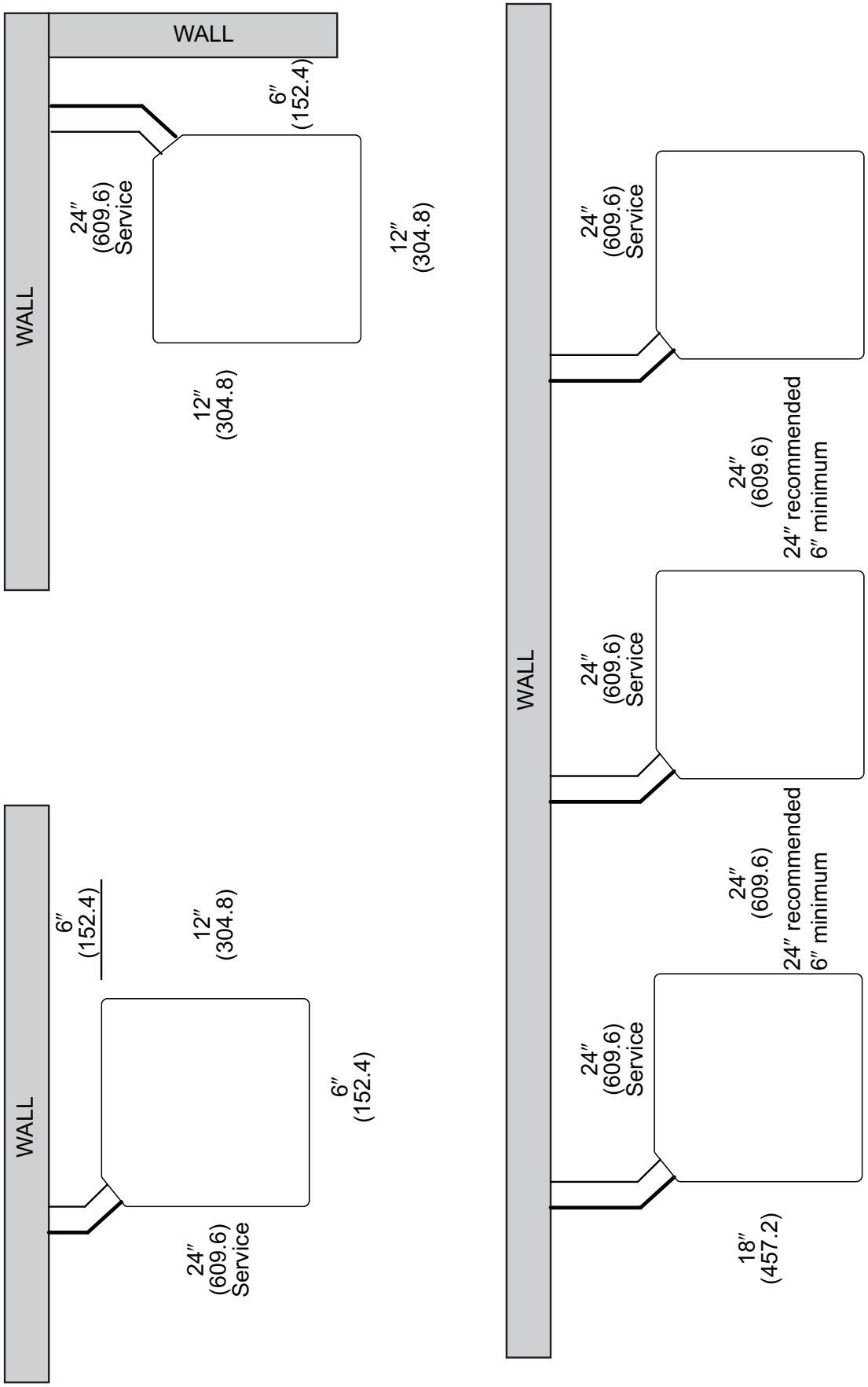

ST-A1225-01-00

NOTE: NUMBERS IN () = mm

IMPORTANT: When installing multiple units in an alcove, roof well or partially enclosed area, ensure there is adequate ventilation to prevent re-circulation of discharge air.

Control Wiring

FIGURE 2
CONTROL WIRING FOR GAS OR OIL FURNACE

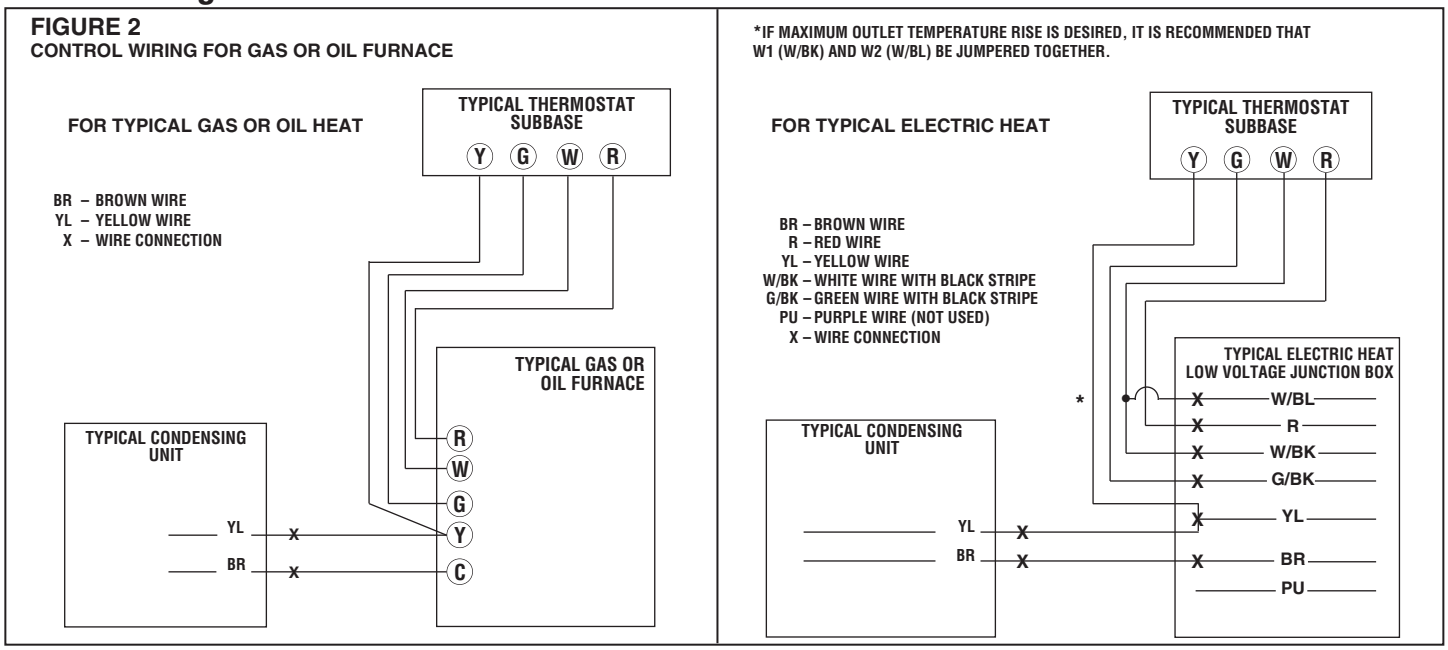

Application Guidelines

1. Intended for outdoor installation with free air inlet and outlet. Outdoor fan external static pressure available is less than 0.01 -in. wc.
2. Minimum outdoor operation air temperature for cooling mode without low-ambient operation accessory is 55°F (12.8°C).
3. Maximum outdoor operating air temperature is 125°F (51.7°C).
4. For reliable operation, unit should be level in all horizontal planes.
5. Use only copper wire for electric connections at unit. Aluminum and clad aluminum are not acceptable for the type of connector provided.
6. Do not apply capillary tube indoor coils to these units.
7. Factory – supplied filter drier must be installed.

Refrigerant Line Size Information

13 - 16 SEER Single-Stage Air Conditioners																	
Unit Size	Allowable Liquid Line Size	Allowable Suction Line Size	Apply Long Line Guidelines if Linear Line Length Exceeds Those Shown Below (Feet)				Equivalent Length (Feet)									
							< 25	26-50	51-75	76-100	101-125	126-150	151-175	176-200	201-225	226-250
			(-)A13	(-)A14 A/B/C	(-)A14 W/X	(-)A16	Maximum Vertical Rise (Outdoor Unit Below Indoor Unit) * / Capacity Multiplier									
1.5 Ton **SEE NOTE	1/4"	5/8"					25 / 1.00	50 / 0.99	62 / 0.98	43 / 0.98	24 / 0.97	5 / 0.97				
	5/16"	5/8"		223	198	188	25 / 1.00	50 / 0.99	75 / 0.98	98 / 0.98	93 / 0.97	88 / 0.97	83 / 0.96	78 / 0.96	73 / 0.95	68 / 0.94
	3/8"	5/8"	178	148	132	125	25 / 1.00	50 / 0.99	75 / 0.98	100 / 0.98	100 / 0.97	100 / 0.97	100 / 0.96	100 / 0.96	100 / 0.95	100 / 0.94
	1/4"	3/4"* *					25 / 1.00	50 / 1.00	62 / 0.99	43 / 0.99	24 / 0.99	5 / 0.99				
	5/16"	3/4"* *		223	198	188	25 / 1.00	50 / 1.00	75 / 0.99	98 / 0.99	93 / 0.99	88 / 0.99	83 / 0.99	78 / 0.98	73 / 0.98	68 / 0.98
	3/8"	3/4"* *	178	148	132	125	25 / 1.00	50 / 1.00	75 / 1.00	100 / 0.99	100 / 0.99	100 / 0.99	100 / 0.99	100 / 0.98	100 / 0.98	100 / 0.98
2 Ton	1/4"	5/8"					25 / 0.99	50 / 0.98	21 / 0.97							
	5/16"	5/8"	213	213	175	175	25 / 0.99	50 / 0.98	75 / 0.97	87 / 0.96	77 / 0.95	69 / 0.94	61 / 0.93	53 / 0.92	45 / 0.91	37 / 0.90
	3/8"	5/8"	142	142	117	117	25 / 0.99	50 / 0.98	75 / 0.97	100 / 0.96	100 / 0.95	100 / 0.94	98 / 0.93	95 / 0.92	92 / 0.91	89 / 0.90
	1/4"	3/4"					25 /1.00	50 / 1.00	21 / 0.99							
	5/16"	3/4"	213	213	175	175	25 /1.00	50 / 1.00	75 / 0.99	87 / 0.99	77 / 0.98	69 / 0.98	61 / 0.98	53 / 0.97	45 / 0.97	37 / 0.96
	3/8"	3/4"	142	142	117	117	25 / 1.00	50 / 1.00	75 / 0.99	100 / 0.99	100 / 0.98	100 / 0.98	98 / 0.98	95 / 0.97	93 / 0.97	90 / 0.96
2.5 Ton	5/16"	5/8"	N/A	N/A	110	110	25 / 0.99	50 / 0.98	75 / 0.96	70 / 0.94	59 / 0.93	48 / 0.91	36 / 0.90			
	3/8"	5/8"	142	117	73	73	25 / 0.99	50 / 0.98	75 / 0.96	100 / 0.94	98 / 0.93	94 / 0.91	90 / 0.90			
	5/16"	3/4"	213	175	110	110	25 / 1.00	50 / 0.99	75 / 0.99	70 / 0.98	59 / 0.98	48 / 0.97	36 / 0.96	25 / 0.96	13 / 0.95	
	3/8"	3/4"	142	117	73	73	25 / 1.00	50 / 0.99	75 / 0.99	100 / 0.98	98 / 0.98	94 / 0.97	90 / 0.96	86 / 0.96	82 / 0.95	78 / 0.95
3 Ton	5/16"	5/8"	N/A	N/A	N/A	N/A	25 / 0.99	50 / 0.97	66 / 0.94	49 / 0.92	32 / 0.90					
	3/8"	5/8"	108	85	90	82	25 / 0.99	50 / 0.97	75 / 0.94	95 / 0.92	89 / 0.90					
	5/16"	3/4"	N/A	128	135	123	25 / 1.00	50 / 0.99	66 / 0.98	49 / 0.98	32 / 0.97	15 / 0.96				
	3/8"	3/4"	108	85	90	82	25 / 1.00	50 / 0.99	75 / 0.98	95 / 0.98	89 / 0.97	84 / 0.96	78 / 0.95	72 / 0.94	67 / 0.93	61 / 0.93
	1/2"	3/4"	54	43	45	41	25 / 1.00	50 / 0.99	75 / 0.98	100 / 0.98	100 / 0.97	100 / 0.96	100 / 0.95	100 / 0.94	100 / 0.93	100 / 0.93
	5/16"	7/8"	n/a	128	135	123	25 / 1.00	50 / 1.00	66 / 1.00	49 / 0.99	32 / 0.99	15 / 0.99				
	3/8"	7/8"	108	85	90	82	25 / 1.00	50 / 1.00	75 / 1.00	95 / 0.99	89 / 0.99	84 / 0.99	78 / 0.98	72 / 0.98	67 / 0.98	61 / 0.97
	1/2"	7/8"	54	43	45	41	25 / 1.00	50 / 1.00	75 / 1.00	100 / 0.99	100 / 0.99	100 / 0.99	100 / 0.98	100 / 0.98	100 / 0.98	100 / 0.97
3.5 Ton	3/8"	3/4"	150	102	75	75	25 / 0.99	50 / 0.98	75 / 0.97	88 / 0.96	80 / 0.95	72 / 0.94	65 / 0.92	57 / 0.91	49 / 0.90	
	1/2"	3/4"	75	51	38	38	25 / 0.99	50 / 0.98	75 / 0.97	100 / 0.96	100 / 0.95	100 / 0.94	100 / 0.92	100 / 0.91	100 / 0.90	
	3/8"	7/8"	150	102	75	75	25 / 1.00	50 / 1.00	75 / 0.99	88 / 0.99	80 / 0.99	72 / 0.98	65 / 0.97	57 / 0.97	49 / 0.96	42 / 0.96
	1/2"	7/8"	75	51	38	38	25 / 1.00	50 / 1.00	75 / 0.99	100 / 0.99	100 / 0.99	100 / 0.98	100 / 0.97	100 / 0.97	100 / 0.96	100 / 0.96

NOTES:
1. Do not exceed 200 ft linear line length.
2. *Do not exceed 180 ft vertical separation if outdoor unit is above indoor unit.
3. **3/4" suction line should only be used for 1.5 ton systems if outdoor unit is below or at same level as indoor to assure proper oil return.
4. Always use the smallest liquid line allowable to minimize refrigerant charge.
5. Applications shaded in light gray indicate capacity multipliers between 0.90 and 0.96 which are not recommended, but are allowed.
6. Applications shaded in dark gray are not recommended due to excessive liquid or suction pressure drop.

Refrigerant Line Size Information (con't.)

13 - 16 SEER Single-Stage Air Conditioners																
Unit Size	Allowable Liquid Line Size	Allowable Suction Line Size	Apply Long Line Guidelines if Linear Line Length Exceeds Those Shown Below (Feet)				Equivalent Length (Feet)									
							< 25	26-50	51-75	76-100	101-125	126-150	151-175	176-200	201-225	226-250
			(-)A13	(-)A14 A/B/C	(-)A14 W/X	(-)A16	Maximum Vertical Rise (Outdoor Unit Below Indoor Unit) * / Capacity Multiplier									
4 Ton	3/8"	3/4"	148	110	N/A	35	25 / 0.99	50 / 0.98	75 / 0.96	77 / 0.95	67 / 0.93	57 / 0.92	46 / 0.91			
	1/2"	3/4"	74	55	N/A	18	25 / 0.99	50 / 0.98	75 / 0.96	100 / 0.95	100 / 0.93	100 / 0.92	100 / 0.91			
	3/8"	7/8"	148	110	N/A	35	25 / 1.00	50 / 0.99	75 / 0.99	77 / 0.98	67 / 0.97	57 / 0.97	46 / 0.96	36 / 0.96	26 / 0.95	15 / 0.95
	1/2"	7/8"	74	55	N/A	18	25 / 1.00	50 / 0.99	75 / 0.99	100 / 0.98	100 / 0.97	100 / 0.97	100 / 0.96	100 / 0.96	99 / 0.95	97 / 0.95
5 Ton	3/8"	3/4"	78	0	N/A	0	25 / 0.99	50 / 0.97	75 / 0.94	61 / 0.92	46 / 0.90					
	1/2"	3/4"	39	0	N/A	0	25 / 0.99	50 / 0.97	75 / 0.94	100 / 0.92	100 / 0.90					
	3/8"	7/8"	78	0	N/A	0	25 / 1.00	50 / 0.99	75 / 0.98	61 / 0.97	46 / 0.96	32 / 0.95	18 / 0.94			
	1/2"	7/8"	39	0	N/A	0	25 / 1.00	50 / 0.99	75 / 0.98	100 / 0.97	100 /0.96	100 / 0.95	97 / 0.94	95 / 0.94	92 / 0.93	89 / 0.92
	3/8"	1-1/8"	78	0	N/A	0	25 / 1.01	50 / 1.01	75 / 1.00	61 / 1.00	46 / 0.99	32 / 0.99	18 / 0.99			
	1/2"	1-1/8"	39	0	N/A	0	25 / 1.01	50 / 1.01	75 / 1.00	100 /1.00	100 / 0.99	100 / 0.99	97 / 0.99	95 / 0.99	92 / 0.99	89 / 0.98

NOTES:
1. Do not exceed 200 ft linear line length.
2. *Do not exceed 180 ft vertical separation if outdoor unit is above indoor unit.
3. **3/4" suction line should only be used for 1.5 ton systems if outdoor unit is below or at same level as indoor to assure proper oil return.
4. Always use the smallest liquid line allowable to minimize refrigerant charge.
5. Applications shaded in light gray indicate capacity multipliers between 0.90 and 0.96 which are not recommended, but are allowed.
6. Applications shaded in dark gray are not recommended due to excessive liquid or suction pressure drop.

This application is acceptable because the 50' vertical rise is less than the maximum rise of 100' for this application. The application is also considered to have a long line set since 75 linear feet exceeds the limit of 43 feet. Reference the long line set section of the I&O for detail.

Example: A (-)A1436AJINA is installed 50' below the indoor unit, requires 75' of 1/2" diameter liquid line, 3/4" diameter suction line, and 4 90° LR elbows, and a filter drier.
- Fitting Equivalent Length (ft.) = (4 × .9) + 6 = 9.6'
- Total Equivalent Length (ft.) = 75' + 9.6' = 84.6'

13 - 16 SEER Single-Stage Air Conditioners																
Unit Size	Allowable Liquid Line Size	Allowable Suction Line Size	Apply Long Line Guidelines if Linear Line Length Exceeds Those Shown Below (Feet)				Equivalent Length (Feet)									
							< 25	26-50	51-75	76-100	101-125	126-150	151-175	176-200	201-225	226-250
			(-)A13	(-)A14 A/B/C	(-)A14 W/X	(-)A16	Maximum Vertical Rise (Outdoor Unit Below Indoor Unit) * / Capacity Multiplier									
3 Ton	5/16"	5/8"	n/a	n/a	n/a	n/a	25 / 0.99	50 / 0.97	66 / 0.94	49 / 0.92	32 / 0.90	NR	NR	NR	NR	NR
	3/8"	5/8"	108	85	90	82	25 / 0.99	50 / 0.97	75 / 0.94	95 / 0.92	89 / 0.90	NR	NR	NR	NR	NR
	5/16"	3/4"	n/a	128	135	123	25 / 1.00	50 / 0.99	66 / 0.98	49 / 0.98	32 / 0.97	15 / 0.96	NR	NR	NR	NR
	3/8"	3/4"	108	85	90	82	25 / 1.00	50 / 0.99	75 / 0.98	95 / 0.98	89 / 0.97	84 / 0.96	78 / 0.95	72 / 0.94	67 / 0.93	61 / 0.93
	1/2"	3/4"	54	43	45	41	25 / 1.00	50 / 0.99	75 / 0.98	100 / 0.98	100 / 0.97	100 / 0.96	100 / 0.95	100 / 0.94	100 / 0.93	100 / 0.93
	5/16"	7/8"	n/a	128	135	123	25 / 1.00	50 / 1.00	66 / 1.00	49 / 0.99	32 / 0.99	15 / 0.99	NR	NR	NR	NR
	3/8"	7/8"	108	85	90	82	25 / 1.00	50 / 1.00	75 / 1.00	95 / 0.99	89 / 0.99	84 / 0.99	78 / 0.98	72 / 0.98	67 / 0.98	61 / 0.97
	1/2"	7/8"	54	43	45	41	25 / 1.00	50 / 1.00	75 / 1.00	100 / 0.99	100 / 0.99	100 / 0.99	100 / 0.98	100 / 0.98	100 / 0.98	100 / 0.97

Refrigerant Line Size Information

13 - 16 SEER Single-Stage Air Conditioners																
Unit Size	Allowable Liquid Line Size mm [in.]	Allowable Suction Line Size mm [in.]	Apply Long Line Guidelines if Linear Line Length Exceeds Those Shown Below (Meters)				Equivalent Length (Meters)									
							< 8	8-15	16-23	24-30	31-38	39-46	47-53	54-61	62-69	70-76
			(-)A13	(-)A14 A/B/C	(-)A14 W/X	(-)A16	Maximum Vertical Rise (Outdoor Unit Below Indoor Unit) * / Capacity Multiplier									
"5.3 KW [1.5 Ton] **SEE NOTE 3	6.35 [1/4]	15.88 [5/8]	N/A	N/A	N/A	N/A	8 / 1.00	15 / 0.99	19 / 0.98	13 / 0.98	7 / 0.97	2 / 0.97	N/R	N/R	N/R	N/R
	7.94 [5/16]	15.88 [5/8]	N/A	68	60	57	8 / 1.00	15 / 0.99	23 / 0.98	30 / 0.98	28 / 0.97	27 / 0.97	25 / 0.96	24 / 0.96	22 / 0.95	21 / 0.94
	9.53 [3/8]	15.88 [5/8]	54	45	40	38	8 / 1.00	15 / 0.99	23 / 0.98	30 / 0.98	30 / 0.97	30 / 0.97	30 / 0.96	30 / 0.96	30 / 0.95	30 / 0.94
	6.35 [1/4]	19.05 [3/4]**	N/A	N/A	N/A	N/A	8 / 1.00	15 / 1.00	19 / 0.99	13 / 0.99	7 / 0.99	2 / 0.99	N/R	N/R	N/R	N/R
	7.94 [5/16]	19.05 [3/4]**	N/A	68	60	57	8 / 1.00	15 / 1.00	23 / 0.99	30 / 0.99	28 / 0.99	27 / 0.99	25 / 0.99	24 / 0.98	22 / 0.98	21 / 0.98
	9.53 [3/8]	19.05 [3/4]**	54	45	40	38	8 / 1.00	15 / 1.00	23 / 0.99	30 / 0.99	30 / 0.99	30 / 0.99	30 / 0.99	30 / 0.98	30 / 0.98	30 / 0.98
7.0 KW [2 Ton]	6.35 [1/4]	15.88 [5/8]	N/A	N/A	N/A	N/A	8 / 0.99	15 / 0.98	6 / 0.97	N/R	N/R	N/R	N/R	N/R	N/R	N/R
	7.94 [5/16]	15.88 [5/8]	65	59	53	53	8 / 0.99	15 / 0.98	23 / 0.97	27 / 0.96	23 / 0.95	21 / 0.94	19 / 0.93	16 / 0.92	14 / 0.91	11 / 0.90
	9.53 [3/8]	15.88 [5/8]	43	39	36	36	8 / 0.99	15 / 0.98	23 / 0.97	30 / 0.96	30 / 0.95	30 / 0.94	30 / 0.93	29 / 0.92	28 / 0.91	27 / 0.90
	6.35 [1/4]	19.05 [3/4]	N/A	N/A	N/A	N/A	8 / 1.00	15 / 1.00	6 / 0.99	N/R	N/R	N/R	N/R	N/R	N/R	N/R
	7.94 [5/16]	19.05 [3/4]	65	59	53	53	8 / 1.00	15 / 1.00	23 / 0.99	27 / 0.99	23 / 0.98	21 / 0.98	19 / 0.98	16 / 0.97	14 / 0.97	11 / 0.96
	9.53 [3/8]	19.05 [3/4]	43	39	36	36	8 / 1.00	15 / 1.00	23 / 0.99	30 / 0.99	30 / 0.98	30 / 0.98	30 / 0.98	29 / 0.97	28 / 0.97	27 / 0.96
8.8 KW [2.5 Ton]	7.94 [5/16]	15.88 [5/8]	N/A	N/A	34	34	8 / 0.99	15 / 0.98	23 / 0.96	21 / 0.94	18 / 0.93	15 / 0.91	11 / 0.90	N/R	N/R	N/R
	9.53 [3/8]	15.88 [5/8]	43	36	22	22	8 / 0.99	15 / 0.98	23 / 0.96	30 / 0.94	30 / 0.93	29 / 0.91	27 / 0.90	N/R	N/R	N/R
	7.94 [5/16]	19.05 [3/4]	65	53	34	34	8 / 1.00	15 / 0.99	23 / 0.99	21 / 0.98	18 / 0.98	15 / 0.97	11 / 0.96	8 / 0.96	4 / 0.95	N/R
	9.53 [3/8]	19.05 [3/4]	43	36	22	22	8 / 1.00	15 / 0.99	23 / 0.99	30 / 0.98	30 / 0.98	29 / 0.97	27 / 0.96	26 / 0.96	25 / 0.95	24 / 0.95
10.6 KW [3 Ton]	7.94 [5/16]	15.88 [5/8]	N/A	N/A	N/A	N/A	8 / 0.99	15 / 0.97	20 / 0.94	15 / 0.92	10 / 0.90	N/R	N/R	N/R	N/R	N/R
	9.53 [3/8]	15.88 [5/8]	33	26	27	25	8 / 0.99	15 / 0.97	23 / 0.94	29 / 0.92	27 / 0.90	N/R	N/R	N/R	N/R	N/R
	7.94 [5/16]	19.05 [3/4]	N/A	39	41	37	8 / 1.00	15 / 0.99	20 / 0.98	15 / 0.98	10 / 0.97	5 / 0.96	N/R	N/R	N/R	N/R
	9.53 [3/8]	19.05 [3/4]	33	26	27	25	8 / 1.00	15 / 0.99	23 / 0.98	29 / 0.98	27 / 0.97	26 / 0.96	24 / 0.95	22 / 0.94	20 / 0.93	19 / 0.93
	12.7 [1/2]	19.05 [3/4]	17	13	14	12	8 / 1.00	15 / 0.99	23 / 0.98	30 / 0.98	30 / 0.97	30 / 0.96	30 / 0.95	30 / 0.94	30 / 0.93	30 / 0.93
	7.94 [5/16]	22.23 [7/8]	N/A	39	41	37	8 / 1.00	15 / 1.00	20 / 1.00	15 / 0.99	10 / 0.99	5 / 0.99	N/R	N/R	N/R	N/R
	9.53 [3/8]	22.23 [7/8]	33	26	27	25	8 / 1.00	15 / 1.00	23 / 1.00	29 / 0.99	27 / 0.99	26 / 0.99	24 / 0.98	22 / 0.98	20 / 0.98	19 / 0.97
	1/2 [12.7]	22.23 [7/8]	17	13	14	12	8 / 1.00	15 / 1.00	23 / 1.00	30 / 0.99	30 / 0.99	30 / 0.99	30 / 0.98	30 / 0.98	30 / 0.98	30 / 0.97
12.3 KW [3.5 Ton]	9.53 [3/8]	19.05 [3/4]	46	31	23	23	8 / 0.99	15 / 0.98	23 / 0.97	27 / 0.96	24 / 0.95	22 / 0.94	20 / 0.92	17 / 0.91	15 / 0.90	N/R
	12.7 [1/2]	19.05 [3/4]	23	15	11	11	8 / 0.99	15 / 0.98	23 / 0.97	30 / 0.96	30 / 0.95	30 / 0.94	30 / 0.92	30 / 0.91	30 / 0.90	N/R
	9.53 [3/8]	22.23 [7/8]	46	31	23	23	8 / 1.00	15 / 1.00	23 / 0.99	27 / 0.99	24 / 0.99	22 / 0.98	20 / 0.97	17 / 0.97	15 / 0.96	13 / 0.96
	12.7 [1/2]	22.23 [7/8]	23	15	11	11	8 / 1.00	15 / 1.00	23 / 0.99	30 / 0.99	30 / 0.99	30 / 0.98	30 / 0.97	30 / 0.97	30 / 0.96	30 / 0.96

NOTES:
1. Do not exceed 61 meters linear line length.
2. *Do not exceed 55 meters vertical separation if outdoor unit is above indoor unit.
3. **19.05 mm [3/4 in.] vapor line should only be used for 1.5 ton systems if outdoor unit is below or at same level as indoor unit to assure proper oil return.
4. Always use the smallest liquid line allowable to minimize refrigerant charge.
5. Applications shaded in light gray indicate capacity multipliers between 0.90 and 0.96 which are not recommended, but are allowed.
6. Applications shaded in dark gray are not recommended due to excessive liquid or suction pressure drop.

Refrigerant Line Size Information (con't.)

13 - 16 SEER Single-Stage Air Conditioners																
Unit Size	Allowable Liquid Line Size mm [in.]	Allowable Suction Line Size mm [in.]	Apply Long Line Guidelines if Linear Line Length Exceeds Those Shown Below (Meters)				Equivalent Length (Meters)									
							< 8	8-15	16-23	24-30	31-38	39-46	47-53	54-61	62-69	70-76
			(-)A13	(-)A14 A/B/C	(-)A14 W/X	(-)A16	Maximum Vertical Rise (Outdoor Unit Below Indoor Unit) * / Capacity Multiplier									
14.1 KW [4 Ton]	9.53 [3/8]	19.05 [3/4]	45	34	N/A	11	8 / 0.99	15 / 0.98	23 / 0.96	24 / 0.95	20 / 0.93	17 / 0.92	14 / 0.91	N/R	N/R	N/R
	12.7 [1/2]	19.05 [3/4]	23	17	N/A	5	8 / 0.99	15 / 0.98	23 / 0.96	30 / 0.95	30 / 0.93	30 / 0.92	30 / 0.91	N/R	N/R	N/R
	9.53 [3/8]	22.23 [7/8]	45	34	N/A	11	8 / 1.00	15 / 0.99	23 / 0.99	24 / 0.98	20 / 0.97	17 / 0.97	14 / 0.96	11 / 0.96	8 / 0.95	5 / 0.95
	12.7 [1/2]	22.23 [7/8]	23	17	N/A	5	8 / 1.00	15 / 0.99	23 / 0.99	30 / 0.98	30 / 0.97	30 / 0.97	30 / 0.96	30 / 0.96	30 / 0.95	30 / 0.95
17.6 KW [5 Ton]	9.53 [3/8]	19.05 [3/4]	24	0	N/A	0	8 / 0.99	15 / 0.97	23 / 0.94	19 / 0.92	14 / 0.90	N/R	N/R	N/R	N/R	N/R
	12.7 [1/2]	19.05 [3/4]	12	0	N/A	0	8 / 0.99	15 / 0.97	23 / 0.94	30 / 0.92	30 / 0.90	N/R	N/R	N/R	N/R	N/R
	9.53 [3/8]	22.23 [7/8]	24	0	N/A	0	8 / 1.00	15 / 0.99	23 / 0.98	19 / 0.97	14 / 0.96	10 / 0.95	5 / 0.94	N/R	N/R	N/R
	12.7 [1/2]	22.23 [7/8]	12	0	N/A	0	8 / 1.00	15 / 0.99	23 / 0.98	30 / 0.97	30 /0.96	30 / 0.95	30 / 0.94	29 / 0.94	28 / 0.93	27 / 0.92
	9.53 [3/8]	28.58 [1-1/8]	24	0	N/A	0	8 / 1.01	15 / 1.01	23 / 1.00	19 / 1.00	14 / 0.99	10 / 0.99	5 / 0.99	N/R	N/R	N/R
	12.7 [1/2]	28.58 [1-1/8]	12	0	N/A	0	8 / 1.01	15 / 1.01	23 / 1.00	30 / 1.00	30 / 0.99	30 / 0.99	30 / 0.99	29 / 0.99	28 / 0.99	27 / 0.98

NOTES:
1. Do not exceed 61 meters linear line length.
2. *Do not exceed 55 meters vertical separation if outdoor unit is above indoor unit.
3. **19.05 mm [3/4 in.] vapor line should only be used for 1.5 ton systems if outdoor unit is below or at same level as indoor unit to assure proper oil return.
4. Always use the smallest liquid line allowable to minimize refrigerant charge.
5. Applications shaded in light gray indicate capacity multipliers between 0.90 and 0.96 which are not recommended, but are allowed.
6. Applications shaded in dark gray are not recommended due to excessive liquid or suction pressure drop.

Performance Data @ AHRI Standard Conditions – Cooling

Designated Tested Combination (DTC)							
Outdoor Unit	Indoor Coil	Total Capacity BTU/H [kW]	Net Sensible BTU/H [kW]	Net Latent BTU/H [kW]	SEER	EER	Indoor CFM [L/s]
SA1618AJ1	TCF2417STA	18000 [5.3]	13500 [4.0]	4500 [1.3]	14.50	12.20	600 [283.2]
SA1624AJ1	TCF2417STA	24000 [7.0]	17500 [5.1]	6500 [1.9]	14.50	12.20	800 [377.6]
SA1630AJ1	TCF3617STA	28400 [8.3]	21600 [6.3]	6800 [2.0]	14.50	12.20	1025 [483.7]
SA1636AJ1	TCF3617STA	34800 [10.2]	24700 [7.2]	10100 [3.0]	14.50	12.20	1000 [471.9]
SA1636BJ1	TCF3617STA	35800 [10.5]	25500 [7.5]	10300 [3.0]	14.50	12.20	1100 [519.1]
SA1642AJ1	TCF4821STA	41000 [12.0]	30400 [8.9]	10600 [3.1]	14.50	12.20	1425 [672.5]
SA1648AJ1	TCF4821MTA	46000 [13.5]	33200 [9.7]	12800 [3.8]	15.10	12.50	1600 [755.1]
SA1660AJ1	TCF6024STA	56500 [16.6]	41200 [12.1]	15300 [4.5]	15.10	12.50	1525 [719.7]

Air Handler							
Outdoor Unit	Air Handler	Total Capacity BTU/H [kW]	Net Sensible BTU/H [kW]	Net Latent BTU/H [kW]	SEER	EER	Indoor CFM [L/s]
SA1618AJ1	SH1C2417STAN	18000 [5.3]	13500 [4.0]	4500 [1.3]	16.00	13.00	600 [283.2]
SA1624AJ1	SH1C2417STAN	24000 [7.0]	17500 [5.1]	6500 [1.9]	16.00	13.00	800 [377.6]
SA1630AJ1	SH1C3617STAN	29000 [8.5]	21600 [6.3]	6800 [2.0]	16.00	13.00	1000 [471.9]
SA1636AJ1	SH1C3621MTAN	35400 [10.3]	24700 [7.2]	10100 [3.0]	16.00	13.00	1000 [471.9]
SA1642AJ1	SH1C4821STAN	41500 [12.2]	33200 [9.7]	12800 [3.8]	16.00	13.00	1400 [660.7]
SA1648AJ1	SH1C4821STAN	42000 [12.2]	41200 [12.1]	15300 [4.5]	16.00	13.00	1400 [660.7]
SA1660AJ1	SH1C6021STAN	56000 [16.4]	41200 [12.1]	15300 [4.5]	15.50	12.50	1575 [755.2]

NOTE: This data includes DTC (Designated Test Combination) ratings and is for reference purposes only. A full listing of official ratings and system match-ups, along with downloadable certificates, can be accessed from the AHRI website: www.ahridirectory.org.

[ ] Designates Metric Conversions

GUIDE SPECIFICATIONS

General

System Description

Outdoor-mounted, air-cooled, split-system air conditioner composite base pan unit suitable for ground or rooftop installation. Unit consists of a hermetic compressor, an air-cooled coil, propeller-type condenser fan, suction and legend line service valve, and a control box. Unit will discharge supply air upward as shown on contract drawings. Unit will be used in a refrigeration circuit to match up to a coil unit.

Quality Assurance

— Unit will be rated in accordance with the latest edition of AHRI Standard 210.

— Unit will be certified for capacity and efficiency, and listed in the latest AHRI directory.

— Unit construction will comply with latest edition of ANSI/ASHRAE and with NEC.

— Unit will be constructed in accordance with UL standards and will carry the UL label of approval. Unit will have c-UL-us approval.

— Unit cabinet will be capable of withstanding ASTM B117 1000-hr salt spray test.

— Air-cooled condenser coils will be leak tested at 150 psig and pressure tested at 550 psig.

— Unit constructed in ISO9001 approved facility.

Delivery, Storage, and Handling

— Unit will be shipped as single package only and is stored and handled per unit manufacturer's recommendations.

Warranty (for inclusion by specifying engineer) — U.S. and Canada only.

Products

Equipment

Factory assembled, single piece, air-cooled air conditioner unit. Contained within the unit enclosure is all factory wiring, piping, controls, compressor, refrigerant charge R-410A, and special features required prior to field start-up.

Unit Cabinet

— Unit cabinet will be constructed of galvanized steel, bonderized, and coated with a powder coat paint.

— All units constructed with louver coil protection and corner post. Louver can be removed by removing one fastener per louver panel.

AIR-COOLED, SPLIT-SYSTEM AIR CONDITIONER
SA16
1-1/2 TO 5 NOMINAL TONS

Fans

— Condenser fan will be direct-drive propeller type, discharging air upward.

— Condenser fan motors will be totally enclosed, 1-phase type with class B insulation and permanently lubricated bearings. Shafts will be corrosion resistant.

— Fan blades will be statically and dynamically balanced.

— Condenser fan openings will be equipped with coated steel wire safety guards.

Compressor

— Compressor will be hermetically sealed.

— Compressor will be mounted on rubber vibration isolators.

Condenser Coil

— Condenser coil will be air cooled.

— Coil will be constructed of aluminum fins mechanically bonded to copper tubes.

Refrigeration Components

— Refrigeration circuit components will include liquid-line shutoff valve with sweat connections, vapor-line shutoff valve with sweat connections, system charge of R-410A refrigerant, and compressor oil.

— Unit will be equipped with filter drier for R-410A refrigerant for field installation.

Operating Characteristics

— The capacity of the unit will meet or exceed _____ Btuh at a suction temperature of _____ °F/°C. The power consumption at full load will not exceed _____ kW.

— Combination of the unit and the evaporator or fan coil unit will have a total net cooling capacity of _____ Btuh or greater at conditions of _____ CFM entering air temperature at the evaporator at _____ °F/°C wet bulb and _____ °F/°C dry bulb, and air entering the unit at _____ °F/°C.

— The system will have a SEER of _____ Btuh/watt or greater at DOE conditions.

Electrical Requirements

— Nominal unit electrical characteristics will be _____ v, single phase, 60 hz. The unit will be capable of satisfactory operation within voltage limits of _____ v to _____ v.

— Nominal unit electrical characteristics will be _____ v, three phase, 60 hz. The unit will be capable of satisfactory operation within voltage limits of _____ v to _____ v.

— Unit electrical power will be single point connection.

— Control circuit will be 24v.

Special Features

— Refer to section of this literature identifying accessories and descriptions for specific features and available enhancements.

GENERAL TERMS OF LIMITED WARRANTY*

Rheem® will furnish a replacement for any part of this product which fails in normal use and service within the applicable period stated, in accordance with the terms of the limited warranty.

***For complete details of the Limited and Conditional Warranties, including applicable terms and conditions, contact your local contractor or the Manufacturer for a copy of the product warranty certificate.**

Conditional Parts
(Registration Required) ..... Ten (10) Years

Russell™ By Rheem
5600 Old Greenwood Road, Fort Smith, AR 72908

Before proceeding with installation, refer to installation instructions packaged with each model, as well as complying with all Federal, State, Provincial, and Local codes, regulations, and practices.

PRINTED IN U.S.A. 9/21 QG FORM NO. ARR-222 REV. 2