engineered for life™

PROJECT NAME _____

LOCATION _____

ARCHITECT _____

ENGINEER _____

CONTRACTOR _____

SUBMITTED BY _____ DATE _____

UNIT SUMMARY

Quantity						
Unit Designation						
Model No.						
Total Cooling						
Sensible Cooling						
Air Ent. Evaporator						
Air Lvg. Evaporator						
Heating Input						
Heating Output						
CFM/ESP						
EER/SEER						
Electrical						
Minimum Ampacity						
Min.-Max. Breaker						
Net Unit Weight						
Accessory						
Catalog Form Number						

ACCESSORIES:

NOTES:

Endeavor® Line RHMVY Air Handlers
Motor: Constant CFM
Airflow Stages: Modulating
Expansion Device: Electronic Expansion Valve (EEV)
Efficiencies: 18+ SEER2
Refrigerant Type: R-454B

JOB NAME _____ LOCATION _____

CONTRACTOR _____ ORDER NO. _____

ENGINEER _____ UNIT MODEL NO. _____

SUBMITTED FOR ☐ APPROVAL ☐ RECORD COIL MODEL NO. _____

DATE _____ AIR HANDLER MODEL NO. _____

UNIT DATA

COOLING PERFORMANCE

EFFICIENCY ..... _____ SEER

TOTAL CAPACITY* ..... _____ MBH [kW]

SENSIBLE CAPACITY*..... _____ MBH [kW]

OUTDOOR DESIGN TEMP..... _____ °F [°C] DB

TEMP. OF AIR ENTERING EVAPORATOR COIL..... _____ °F [°C] DB

_____ °F [°C] WB

POWER INPUT REQUIREMENT ..... _____ kW

(*uses blower motor heat)

HEATING PERFORMANCE

EFFICIENCY ..... _____ HSPF

TOTAL CAPACITY* ..... _____ MBH [kW]

OUTDOOR DESIGN TEMP..... _____ °F [°C] DB

TEMP. OF AIR ENTERING EVAPORATOR COIL..... _____ °F [°C] DB

SUPPLY AIR BLOWER PERFORMANCE

TOTAL AIR SUPPLY..... _____ CFM [L/s]

TOTAL RESISTANCE EXTERNAL TO UNIT..... _____ IWG

BLOWER SPEED..... _____ RPM

POWER OUTPUT REQUIREMENT..... _____ BHP

MOTOR RATING ..... _____ HP [W]

POWER INPUT REQUIREMENT ..... _____ kW

ELECTRICAL DATA

POWER SUPPLY..... _____ Hz

TOTAL UNIT AMPACITY..... _____ AMPS

MINIMUM WIRE SIZE..... _____ AWG

MAXIMUM OVERCURRENT DEVICE FUSES/HACR BREAKER ..... _____ AMPS

CLEARANCES

ACCESS SIDE	24" [609.6 mm]
AIR INLETS	12" [304.8 mm]
ABOVE UNIT	60" [1524 mm]

FEATURES

- **Constant CFM Motor:** Truly variable speed technology allows for ultimate humidity control, quieter sound levels and contributes to year-round energy savings
- **Quietest Operation[1]:** Provided by Modulating operation and truly variable speed airflow technology and sturdy cabinet construction with 1.0 inch of foil faced insulation for some of the quietest sound characteristics
- **PlusOne® Diagnostics:** With the Contractor & EcoNet® Apps, built-in EcoNet & Bluetooth®[2] technology makes monitoring, troubleshooting and repairing the product easier than ever before
- **Dip Switch Free Installation Commissioning via Bluetooth Technology:** Seamless final install step without DIP switch configuration using the Rheem Contractor App.
- **EcoNet Enabled Air Handler:**
  - — The latest in sensor technology and the EcoNet monitoring system provides a new level of protection, control and energy savings
  - — Allows on-the-go control and receipt of system alerts by the homeowner via the EcoNet Smart Thermostat and EcoNet App[3]
- **Aluminum Indoor Coil Design:** Are constructed of aluminum fins bonded to internally grooved aluminum tubing and are more corrosion resistant
- **Versatile 4-Way Convertible Compact Design:** Allows for upflow, downflow, horizontal left and horizontal right applications, even in the smallest of spaces
- **Rugged Steel, Compact Cabinet Construction:** Designed for added strength and versatility
- **Field-installed Auxiliary Heater Kits:** Provide exact heat for indoor comfort and include circuit breakers which meet UL and cUL requirements for service disconnect
- **Less than 2% Cabinet Air Leakage at 1-inch H_2O:** When tested in accordance with ASHRAE Standard 193
- **PlusOne® Refrigerant Detection System™[4]:** An integrated one-box, patented design featuring the A2L sensor and mitigation board, offering easier commissioning with a single component and simplified wiring configuration, compatibility with any 24V thermostat application and system protection by automatically pausing outdoor unit operation — if excess refrigerant is detected

ISO 9001:2015 | c UL us LISTED | AHRI CERTIFIED | Powered by EcoNet® Technology

[1]Based on manufacturer's air handler offering, and the product's airflow stages, motor type and cabinet insulation. Sound levels are also dependent on air handler location and installation. [2]The Bluetooth word mark and logos are registered trademarks owned by Bluetooth SIG, Inc. and any use of such marks by Rheem is under license. Other trademarks and trade names are those of their respective owners. [3]WIFI broadband internet connection required. Download the EcoNet App from the App Store® or Google Play® to set up your EcoNet Smart Thermostat. Receipt of notifications depend on home WIFI set up. Amazon, Alexa and all related logos are trademarked of Amazon.com, Inc. or its affiliates. [4]Factory or field installed in the furnace coil or air handler and is applicable to the complete heating and cooling system featuring Low GWP refrigerant (A2L).

RHMVY

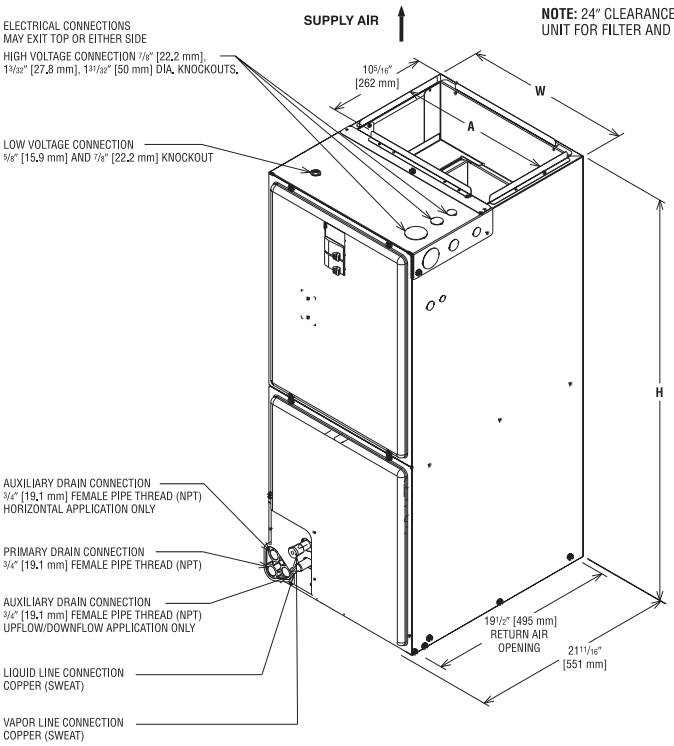

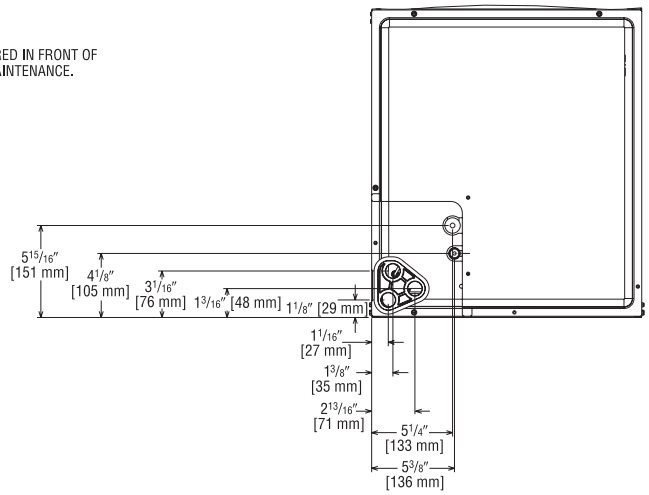

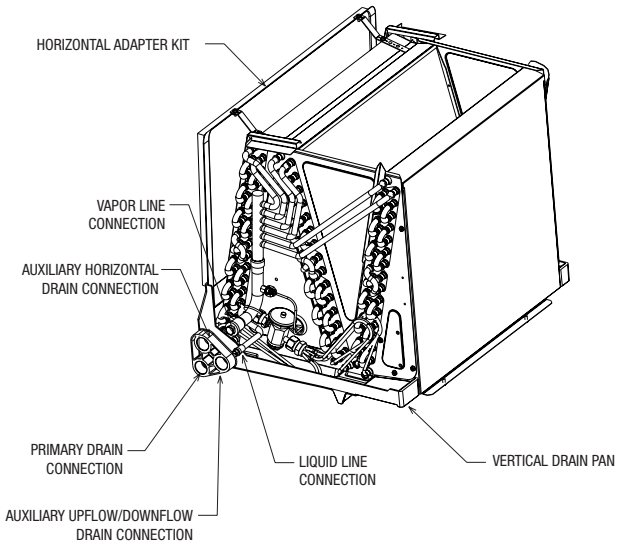

Unit Dimensions

Model Size RHMVY	Refrigerant Connections Sweat (In.) [mm] ID		Unit Width "W" In. [mm]	Unit Height "H" In. [mm]	Supply Duct "A" In. [mm]	Unit Weight/ Shipping Weight (Lbs.) [kg]
	Liquid	Vapor				
2417SEACN	3/8 [9.53]	3/4 [19.05]	17 1/2 [445]	42 1/2 [1080]	16 [406]	91/105 [41/48]
2421MEACN	3/8 [9.53]	3/4 [19.05]	21 [533]	42 1/2 [1080]	19 1/2 [495]	103/118 [47/54]
3621MEACA	3/8 [9.53]	7/8 [22.23]	21 [533]	57 [1448]	19 1/2 [495]	123/139 [56/63]
4821SEACA	3/8 [9.53]	7/8 [22.23]	21 [533]	57 [1448]	19 1/2 [495]	140/152 [64/69]
6021SEACA	3/8 [9.53]	7/8 [22.23]	21 [533]	57 [1448]	19 1/2 [495]	140/152 [64/69]
6024SEACN	3/8 [9.53]	7/8 [22.23]	24 1/2 [622]	55 1/2 [1410]	23 [584]	159/176 [72/80]

[ ] Designates Metric Conversions

Before proceeding with installation, refer to installation instructions packaged with each model, as well as complying with all Federal, State, Provincial, and Local codes, regulations, and practices.

© 2026 Rheem Manufacturing Company. Trademarks are property of their respective owners.
In keeping with its policy of continuous progress and product improvement, manufacturer reserves the right to make changes without notice.
5600 Old Greenwood Road • Fort Smith, Arkansas 72908

5/26 FORM NO. X33-1685 REV. 1