engineered for life™

Endeavor® Line Air Handlers

Powered by EcoNet® Technology

RHMVY

Motor: Constant CFM
Airflow Stages: Modulating
Expansion Device: Electronic Expansion Valve (EEV)
Efficiencies: 18+ SEER2
Refrigerant Type: R-454B

ISO 9001:2015

c UL us LISTED

AHRI CERTIFIED™ www.ahridirectory.org
Unitary Small AC
AHRI Standard 210/240
Certification applies only when the complete system is listed with AHRI.

Table of Contents

Features and Benefits 3
Model Number Identification 4
Dimensional Data 5-6
Airflow Directional Data 7
Airflow Performance Data 8
Electrical Data 9-14
Limited Warranty 15

Features and Benefits

- **Constant CFM Motor:** Truly variable speed technology allows for ultimate humidity control, quieter sound levels and contributes to year-round energy savings
- **Quietest Operation[1]:** Provided by Modulating operation and truly variable speed airflow technology and sturdy cabinet construction with 1.0 inch of foil faced insulation for some of the quietest sound characteristics
- **PlusOne® Diagnostics:** With the Rheem® Contractor and EcoNet® Apps, built-in EcoNet & Bluetooth®[2] technology makes monitoring, troubleshooting and repairing the product easier than ever before
- **Dip Switch Free Installation Commissioning via Bluetooth Technology:** Seamless final install step without DIP switch configuration using the Rheem Contractor App.
- **EcoNet Enabled Air Handler:**
  - The latest in sensor technology and the EcoNet monitoring system provides a new level of protection, control and energy savings
  - Allows on-the-go control and receipt of system alerts by the homeowner via the EcoNet Smart Thermostat and EcoNet App[3]
- **Aluminum Indoor Coil Design:** Are constructed of aluminum fins bonded to internally grooved aluminum tubing and are more corrosion resistant
- **Versatile 4-Way Convertible Compact Design:** Allows for upflow, downflow, horizontal left and horizontal right applications, even in the smallest of spaces
- **Rugged Steel, Compact Cabinet Construction:** Designed for added strength and versatility
- **Field-installed Auxiliary Heater Kits:** Provide exact heat for indoor comfort and include circuit breakers which meet UL and cUL requirements for service disconnect
- **Less than 2% Cabinet Air Leakage at 1-inch H_2O:** When tested in accordance with ASHRAE Standard 193
- **PlusOne Refrigerant Detection System™[4]:** An integrated one-box, patented design featuring the A2L sensor and mitigation board, offering easier commissioning with a single component and simplified wiring configuration, compatibility with any 24V thermostat application and system protection by automatically pausing outdoor unit operation — if excess refrigerant is detected

[1]Based on manufacturer's air handler offering, and the product's airflow stages, motor type and cabinet insulation. Sound levels are also dependent on air handler location and installation. [2]The Bluetooth word mark and logos are registered trademarks owned by Bluetooth SIG, Inc. and any use of such marks by Rheem is under license. Other trademarks and trade names are those of their respective owners. [3]WIFI broadband internet connection required. Download the EcoNet App from the App Store® or Google Play® to set up your EcoNet Smart Thermostat. Receipt of notifications depend on home WIFI set up. Amazon, Alexa and all related logos are trademarked of Amazon.com, Inc. or its affiliates. [4]Factory or field-installed in the furnace coil or air handler and is applicable to the complete heating and cooling system featuring Low GWP refrigerant (A2L).

Air Handlers

R	H	M	V	Y	24	17	S	E	A	C	N	J	L
Brand	**Category**	**Stages Of Airflow**	**Motor Type**	**Refrigerant**	**Capacity**	**Width**	**Efficiency**	**Metering**	**Major Series**	**Controls**	**Coil Series**	**Voltage**	**Option**
R - Rheem	H - Multipoise Air Handler	M - Modulating	V - Constant CFM	Y - R-454B	24 - 24,000 [7.03 kW] 36 - 36,000 [10.55 kW] 48 - 48,000 [14.07 kW] 60 - 60,000 [17.58 kW]	17 - 17.5" 21 - 21" 24 - 24.5"	S - Standard M - Mid	E - EEV	A - 1st Design	C - Communicating	A - A Coil N - N Coil	J - 208-240/1/60	Blank - Factory-Installed Sensor L - Less A2L Sensor

Available Models
RHMVY2417SEACNJ
RHMVY2421MEACNJ
RHMVY2417SEACNJL
RHMVY2421MEACNJL
RHMVY3621MEACAJ
RHMVY3621MEACAJL
RHMVY4821SEACAJ
RHMVY4821SEACAJL
RHMVY6021SEACAJ
RHMVY6024SEACNJ
RHMVY6021SEACAJL
RHMVY6024SEACNJL

Standard Equipment
Compact unit design - all standard heat air handler models are only 42-1/2 to 57 inches [1079 to 1448mm] high
Attractive pre-painted cabinet exterior
Rugged wall steel cabinet construction
1.0" foil faced insulation for excellent thermal and sound performance
Four leg blower motor mount
Blower housing with controls, motor and blower.
Slide-out blower design for service & maintenance convenience
Traditional open wire element design for heat applications
Field convertible for vertical, downflow, horizontal left hand or right hand air supply
Indoor coil design provideds low air side pressure drop, high performance and compact size
Coils constructed of aluminum fins bonded to internally grooved aluminum tubing
Coils are tested at the factory with an extensive refrigerant leak check
Coils have copper sweat refrigerant connections
Coils utilize chatleff metering device connections
Molded poymer corrosion resistant condensate drain pan on all indoor coils
Supply duct flanges
Provisions for field electrical, connections available form either side of top of cabinet
Connection point for high and low voltage wiring
Concentric knockouts are provided for power connection

[ ] Designates Metric Conversions

Unit Dimensions

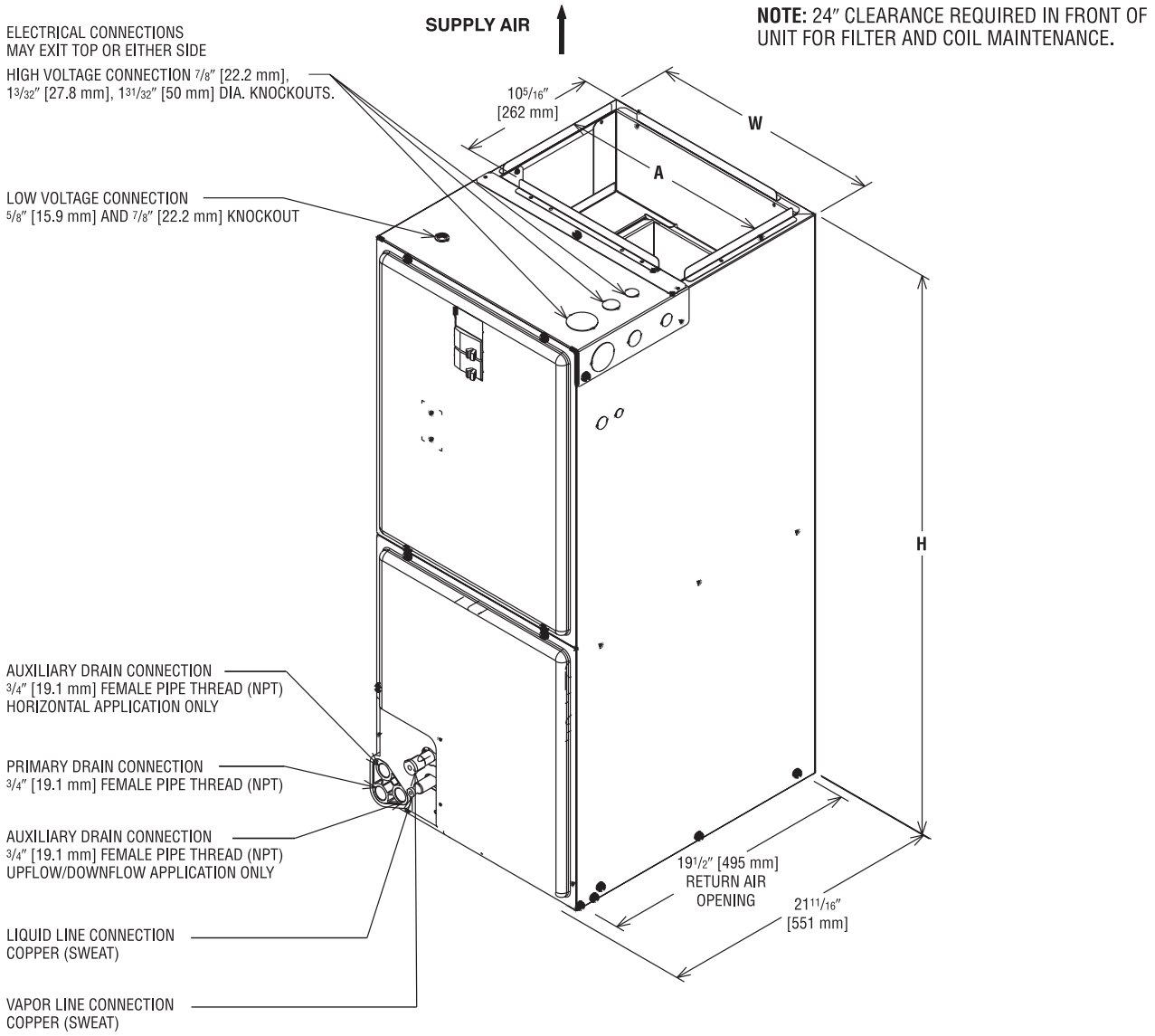

Return Air Opening Dimensions

Model Cabinet Size	Return Air Opening Width (Inches)	Return Air Opening Depth/Length (Inches)
17	15 7/8	19 3/4
21	19 3/8	19 3/4
24	22 7/8	19 3/4

Unit Dimensions & Weights

Model Size RHMVY	Refrigerant Connections Sweat (In.) [mm] ID		Unit Width "W" In. [mm]	Unit Height "H" In. [mm]	Supply Duct "A" In. [mm]	Unit Weight/ Shipping Weight (Lbs.) [kg]
	Liquid	Vapor				
2417SEACN	3/8 [9.53]	3/4 [19.05]	17 1/2 [445]	42 1/2 [1080]	16 [406]	91/105 [41/48]
2421MEACN	3/8 [9.53]	3/4 [19.05]	21 [533]	42 1/2 [1080]	19 1/2 [495]	103/118 [47/54]
3621MEACA	3/8 [9.53]	7/8 [22.23]	21 [533]	57 [1448]	19 1/2 [495]	123/139 [56/63]
4821SEACA	3/8 [9.53]	7/8 [22.23]	21 [533]	57 [1448]	19 1/2 [495]	140/152 [64/69]
6021SEACA	3/8 [9.53]	7/8 [22.23]	21 [533]	57 [1448]	19 1/2 [495]	140/152 [64/69]
6024SEACN	3/8 [9.53]	7/8 [22.23]	24 1/2 [622]	55 1/2 [1410]	23 [584]	159/176 [72/80]

[ ] Designates Metric Conversions

FIGURE 6
VERTICAL DOWNFLOW & HORIZONTAL RIGHT APPLICATION

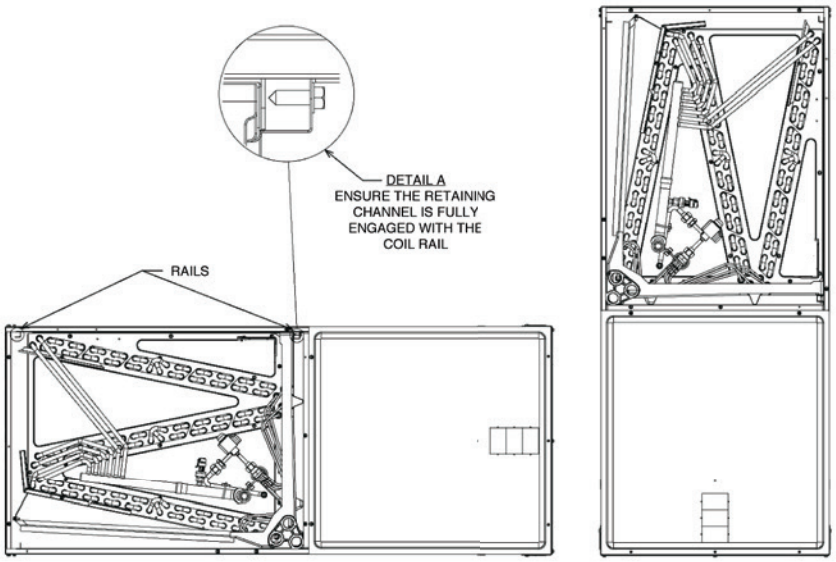

FIGURE 7
INDOOR COIL AND DRAIN PAN SET-UP

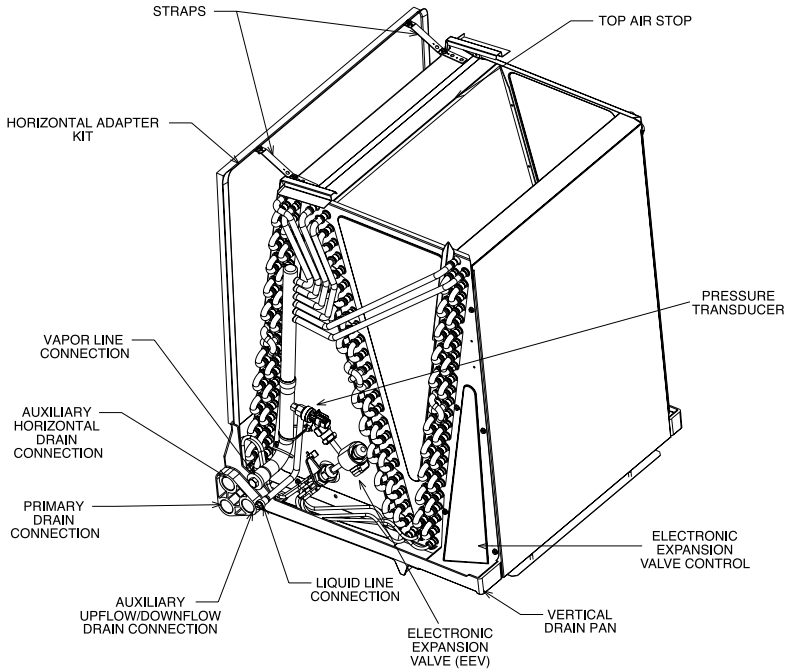

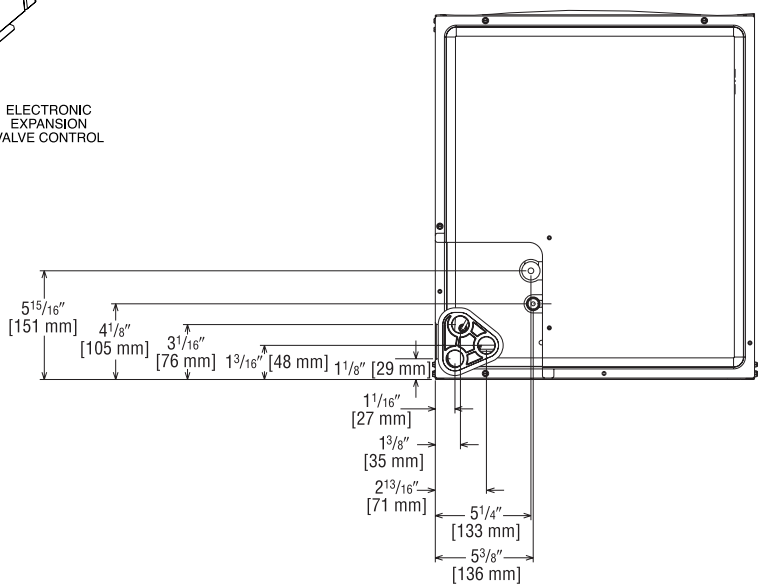

[ ] Designates Metric Conversions

Airflow Directional Data

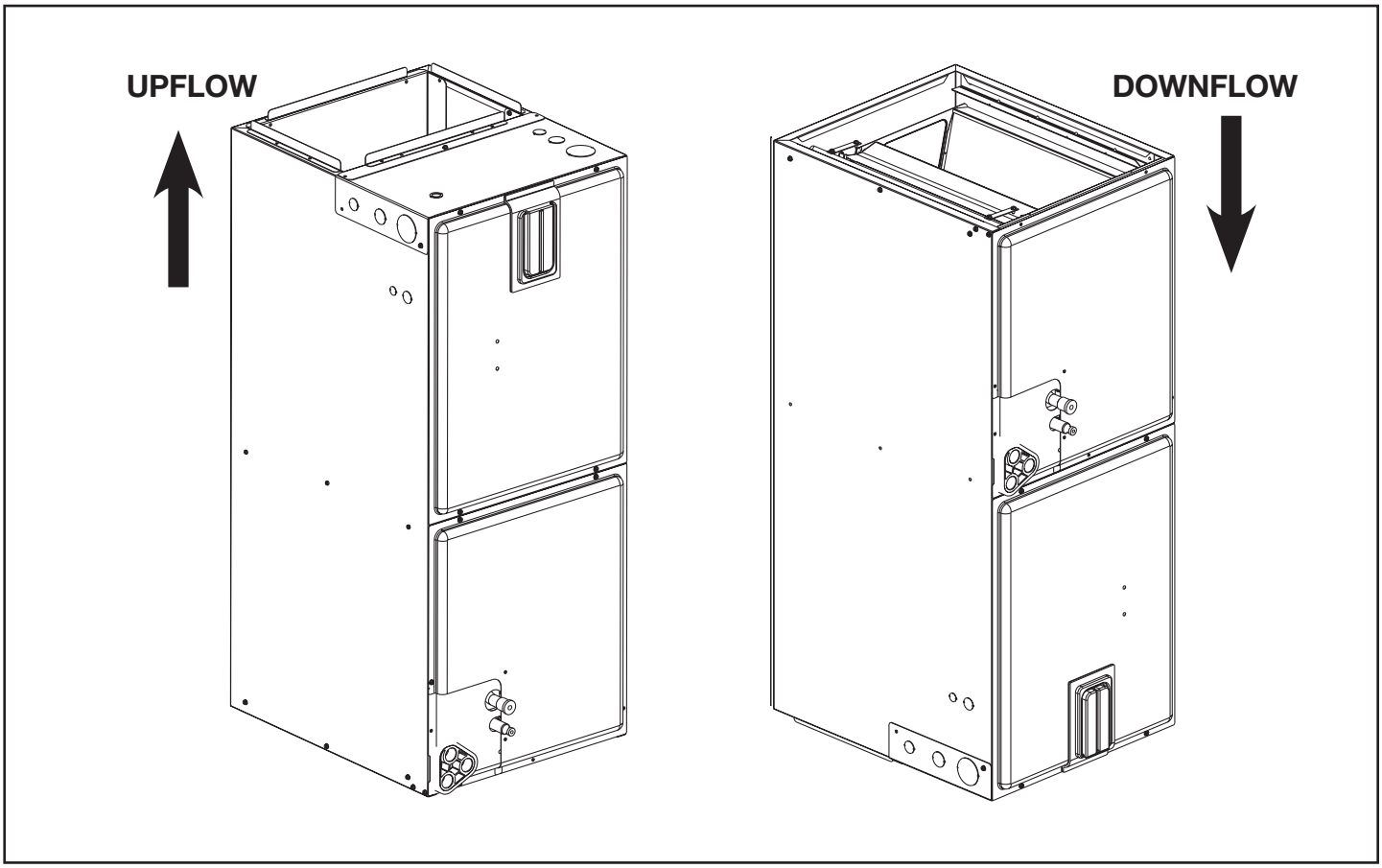

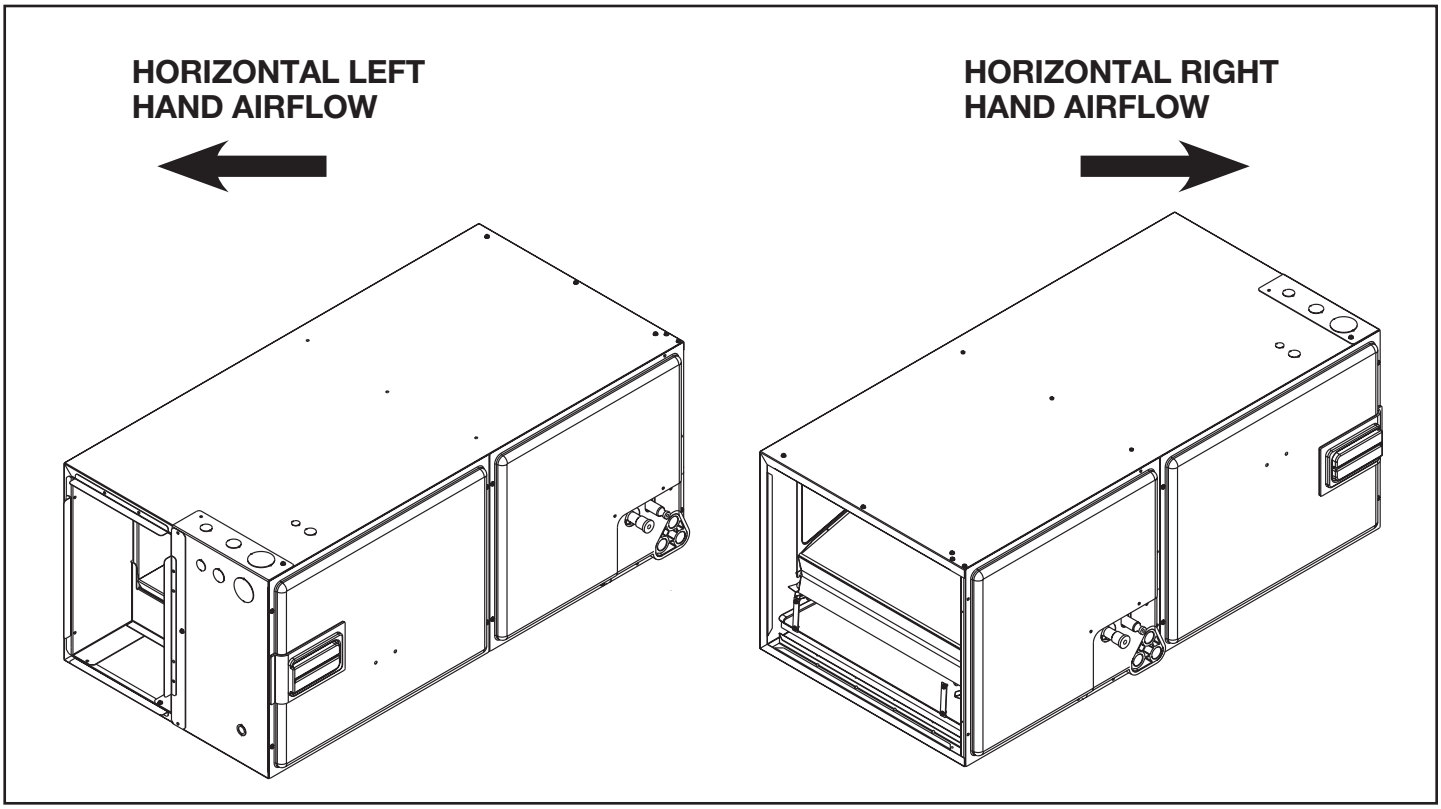

Airflow Performance

Airflow performance data is based on cooling performance with a coil and no filter in place. Select performance table for appropriate unit size, voltage and number of electric heaters to be used. Make sure external static applied to unit allows operation within the minimum and maximum limits shown in table below for both cooling and electric heat operation. For optimum blower performance, operate the unit in the .3 [8 mm] to .7 inches [18 mm] W.C. external static range. Units with coils should be applied with a minimum of .1 inch [3 mm] W.C. external static range.

Airflow Operating Limits

Rated Airflow for RHMVY Air-Handlers + RA19 Condensing Units & RP19 Heat Pumps					
Air Handler Model	Outdoor Model	RHMVY Air-Flow (EcoNet®)			
		Cooling Mode CFM [L/s]		Heating Mode CFM [L/s]	
		Minimum	Maximum	Minimum	Maximum
RHMVY2417SEACN	RA19AY24	500 [236]	800 [378]	—	—
RHMVY2421MEACN	RA19AY24	500 [236]	800 [378]	—	—
RHMVY3621MEACA	RA19AY24	1000 [472]	1600 [755]	—	—
	RA19AY36	1000 [472]	1600 [755]	—	—
	RP19AY24	1000 [472]	1600 [755]	1000 [472]	1700 [802]
	RP19AY36	1000 [472]	1600 [755]	1000 [472]	1700 [802]
RHMVY4821SEACA	RA19AY48	1000 [472]	1600 [755]	—	—
	RP19AY48	1000 [472]	1600 [755]	1000 [472]	1700 [802]
RHMVY6021SEACA	RA19AY36	1000 [472]	1600 [755]	—	—
	RA19AY48	1000 [472]	1600 [755]	—	—
	RA19AY60	1000 [472]	1600 [755]	—	—
	RP19AY36	1000 [472]	1600 [755]	1000 [472]	1700 [802]
	RP19AY48	1000 [472]	1600 [755]	1000 [472]	1700 [802]
	RP19AY60	1000 [472]	1600 [755]	1000 [472]	1700 [802]
RHMVY6024SEACN	RA19AY36	1000 [472]	1600 [755]	—	—
	RA19AY48	1000 [472]	1600 [755]	—	—
	RA19AY60	1000 [472]	1600 [755]	—	—

[ ] Designates Metric Conversions

Electrical Data – Blower Motor Only – No Electric Heat

Model RHMVY	Voltage	Phase*	Hertz	HP [W]	RPM	Motor Amps.	Minimum Circuit Ampacity	Maximum Overcurrent Protection
2417SEACN	208/240	1	60	1/3	300-1300	2.8	4	15
2421MEACN		1		1/3		2.7	4	15
3621MEACA		1		1/2		3.8	5	15
4821SEACA		1		3/4		5.7	8	15
6021SEACA		1		3/4		5.7	8	15
6024SEACN		1		3/4		5.2	7	15

Electrical Data – With Electric Heat

Air Handler Model	Heater Model Number	Heater kW (208/240V)	Ph/Hz	No. Elements - kW per	Type Supply Circuit Single Circuit Multiple Circuit	Heater Circuit Amps	Tested Blower Motor Amps	Minimum Circuit Ampacity	Maximum Overcurrent Protection
RHMVY2417SEACNJ	RXBH-1724?03J-B	2.3/3.0	1/60	1-3.0	SINGLE	11.1/12.5	2.8	18/20	20/20
	RXBH-1724?05J-B	3.6/4.8	1/60	1-4.8	SINGLE	17.4/20	2.8	26/29	30/30
	RXBH-1724?07J-B	5.4/7.2	1/60	2-3.6	SINGLE	26/30	2.8	36/41	40/45
	RXBH-1724?10J-B	7.2/9.6	1/60	2-4.8	SINGLE	34.7/40	2.8	47/54	50/60
	RXBH-1724A13J-B	9.4/12.5	1/60	3-4.17	SINGLE	45.2/52.1	2.8	60/69	60/70
		3.1/4.2	1/60	1-4.17	MULTIPLE CKT 1	15/17.5	2.8	23/26	25/30
		6.3/8.3	1/60	2-4.17	MULTIPLE CKT 2	30.3/34.6	0	38/44	40/45
	RXBH-17A05C-B	3.6/4.8	3/60	1-4.8	SINGLE	10/11.6	2.8	16/18	20/20
	RXBH-24A05C-B	3.6/4.8	3/60	1-4.8	SINGLE	10/11.6	2.8	16/18	20/20
	RXBH-1724B05C-B	3.6/4.8	3/60	1-4.8	SINGLE	10/11.6	2.8	16/18	20/20
	RXBH-1724A07C-B	5.4/7.2	3/60	2-3.6	SINGLE	15/17.4	2.8	23/26	25/30
	RXBH-1724A10C-B	7.2/9.6	3/60	2-4.8	SINGLE	20/23.1	2.8	29/33	30/35
	RXBH-1724A13C-B	9.4/12.5	3/60	3-4.17	SINGLE	26.1/30.1	2.8	37/42	40/45
RHMVY2421MEACNJ	RXBH-1724?03J-B	2.3/3.0	1/60	1-3.0	SINGLE	11.1/12.5	2.7	18/19	20/20
	RXBH-1724?05J-B	3.6/4.8	1/60	1-4.8	SINGLE	17.4/20	2.7	26/29	30/30
	RXBH-1724?07J-B	5.4/7.2	1/60	2-3.6	SINGLE	26/30	2.7	36/41	40/45
	RXBH-1724?10J-B	7.2/9.6	1/60	2-4.8	SINGLE	34.7/40	2.7	47/54	50/60
	RXBH-1724A13J-B	9.4/12.5	1/60	3-4.17	SINGLE	45.2/52.1	2.7	60/69	60/70
		3.1/4.2	1/60	1-4.17	MULTIPLE CKT 1	15/17.5	2.7	23/26	25/30
		6.3/8.3	1/60	2-4.17	MULTIPLE CKT 2	30.3/34.6	0	38/44	40/45
	RXBH-17A05C-B	3.6/4.8	3/60	1-4.8	SINGLE	10/11.6	2.7	16/18	20/20
	RXBH-24A05C-B	3.6/4.8	3/60	1-4.8	SINGLE	10/11.6	2.7	16/18	20/20
	RXBH-1724B05C-B	3.6/4.8	3/60	1-4.8	SINGLE	10/11.6	2.7	16/18	20/20
	RXBH-1724A07C-B	5.4/7.2	3/60	2-3.6	SINGLE	15/17.4	2.7	23/26	25/30
	RXBH-1724A10C-B	7.2/9.6	3/60	2-4.8	SINGLE	20/23.1	2.7	29/33	30/35
	RXBH-1724A13C-B	9.4/12.5	3/60	3-4.17	SINGLE	26.1/30.1	2.7	36/41	40/45
RHMVY3621MEACAJ	RXBH-1724?03J-B	2.3/3.0	1/60	1-3.0	SINGLE	11.1/12.5	3.8	19/21	20/25
	RXBH-1724?05J-B	3.6/4.8	1/60	1-4.8	SINGLE	17.4/20	3.8	27/30	30/30
	RXBH-1724?07J-B	5.4/7.2	1/60	2-3.6	SINGLE	26/30	3.8	38/43	40/45
	RXBH-1724?10J-B	7.2/9.6	1/60	2-4.8	SINGLE	34.7/40	3.8	49/55	50/60
	RXBH-1724A13J-B	9.4/12.5	1/60	3-4.17	SINGLE	45.2/52.1	3.8	62/70	70/70
		3.1/4.2	1/60	1-4.17	MULTIPLE CKT 1	15/17.5	3.8	24/27	25/30
		6.3/8.3	1/60	2-4.17	MULTIPLE CKT 2	30.3/34.6	0	38/44	40/45
	RXBH-1724A15J-B	10.8/14.4	1/60	3-4.8	SINGLE	52/60	3.8	70/80	70/80
		3.6/4.8	1/60	1-4.8	MULTIPLE CKT 1	17.4/20	3.8	27/30	30/30
		7.2/9.6	1/60	2-4.8	MULTIPLE CKT 2	34.7/40	0	44/50	45/50
	RXBH-1724A18J-B	12.8/17.0	1/60	3-5.68	SINGLE	61.6/70.9	3.8	82/94	90/100
		4.3/5.7	1/60	1-5.68	MULTIPLE CKT 1	20.7/23.8	3.8	31/35	35/35
		8.5/11.3	1/60	2-5.68	MULTIPLE CKT 2	40.9/47.1	0	52/59	60/60
	RXBH-17A05C-B	3.6/4.8	3/60	1-4.8	SINGLE	10/11.6	3.8	18/20	20/20
	RXBH-24A05C-B	3.6/4.8	3/60	1-4.8	SINGLE	10/11.6	3.8	18/20	20/20
	RXBH-1724B05C-B	3.6/4.8	3/60	1-4.8	SINGLE	10/11.6	3.8	18/20	20/20
	RXBH-1724A07C-B	5.4/7.2	3/60	2-3.6	SINGLE	15/17.4	3.8	24/27	25/30
	RXBH-1724A10C-B	7.2/9.6	3/60	2-4.8	SINGLE	20/23.1	3.8	30/34	30/35
	RXBH-1724A13C-B	9.4/12.5	3/60	3-4.17	SINGLE	26.1/30.1	3.8	38/43	40/45
	RXBH-1724A15C-B	10.8/14.4	3/60	3-4.8	SINGLE	30/34.7	3.8	43/49	45/50
	RXBH-1724A18C-B	12.8/17.0	3/60	3-5.68	SINGLE	35.6/40.9	3.8	50/56	50/60

? = A/B/C Connection Types
A = Breaker
B = Terminal Block
C = Pullout Disconnect

Electrical Data – With Electric Heat (Con't.)

Air Handler Model	Heater Model Number	Heater kW (208/240V)	Ph/Hz	No. Elements - kW per	Type Supply Circuit Single Circuit Multiple Circuit	Heater Circuit Amps	Tested Blower Motor Amps	Minimum Circuit Ampacity	Maximum Overcurrent Protection
RHMVY4821SEACAJ	RXBH-1724?03J-B	2.3/3.0	1/60	1-3.0	SINGLE	11.1/12.5	5.7	21/23	25/25
	RXBH-1724?05J-B	3.6/4.8	1/60	1-4.8	SINGLE	17.4/20	5.7	29/33	30/35
	RXBH-1724?07J-B	5.4/7.2	1/60	2-3.6	SINGLE	26/30	5.7	40/45	40/45
	RXBH-1724?10J-B	7.2/9.6	1/60	2-4.8	SINGLE	34.7/40	5.7	51/58	60/60
	RXBH-1724A13J-B	9.4/12.5	1/60	3-4.17	SINGLE	45.2/52.1	5.7	64/73	70/80
		3.1/4.2	1/60	1-4.17	MULTIPLE CKT 1	15/17.5	5.7	26/29	30/30
		6.3/8.3	1/60	2-4.17	MULTIPLE CKT 2	30.3/34.6	0	38/44	40/45
	RXBH-1724A15J-B	10.8/14.4	1/60	3-4.8	SINGLE	52/60	5.7	73/83	80/90
		3.6/4.8	1/60	1-4.8	MULTIPLE CKT 1	17.4/20	5.7	29/33	30/35
		7.2/9.6	1/60	2-4.8	MULTIPLE CKT 2	34.7/40	0	44/50	45/50
	RXBH-1724A18J-B	12.8/17.0	1/60	3-5.68	SINGLE	61.6/70.9	5.7	85/96	90/100
		4.3/5.7	1/60	1-5.68	MULTIPLE CKT 1	20.7/23.8	5.7	33/37	35/40
		8.5/11.3	1/60	2-5.68	MULTIPLE CKT 2	40.9/47.1	0	52/59	60/60
	RXBH-24A20J-B	14.4/19.2	1/60	4-4.8	SINGLE	69.3/80	5.7	94/108	100/110
		7.2/9.6	1/60	2-4.8	MULTIPLE CKT 1	34.7/40	5.7	51/58	60/60
		7.2/9.6	1/60	2-4.8	MULTIPLE CKT 2	34.7/40	0	44/50	45/50
	RXBH-24A25J-B	18.0/24.0	1/60	6-4.0	SINGLE	86.6/100	5.7	116/133	125/150
		6.0/8.0	1/60	2-4.0	MULTIPLE CKT 1	28.9/33.4	5.7	44/49	45/50
		6.0/8.0	1/60	2-4.0	MULTIPLE CKT 2	28.9/33.4	0	37/42	40/45
		6.0/8.0	1/60	2-4.0	MULTIPLE CKT 3	28.9/33.4	0	37/42	40/45
	RXBH-24A30J-B	21.6/28.8	1/60	6-4.8	SINGLE	103.9/120	5.7	137/158	150/175
		7.2/9.6	1/60	2-4.8	MULTIPLE CKT 1	34.7/40	5.7	51/58	60/60
		7.2/9.6	1/60	2-4.8	MULTIPLE CKT 2	34.7/40	0	44/50	45/50
		7.2/9.6	1/60	2-4.8	MULTIPLE CKT 3	34.7/40	0	44/50	45/50
	RXBH-17A05C-B	3.6/4.8	3/60	1-4.8	SINGLE	10/11.6	5.7	20/22	20/25
	RXBH-24A05C-B	3.6/4.8	3/60	1-4.8	SINGLE	10/11.6	5.7	20/22	20/25
	RXBH-1724B05C-B	3.6/4.8	3/60	1-4.8	SINGLE	10/11.6	5.7	20/22	20/25
	RXBH-1724A07C-B	5.4/7.2	3/60	2-3.6	SINGLE	15/17.4	5.7	26/29	30/30
	RXBH-1724A10C-B	7.2/9.6	3/60	2-4.8	SINGLE	20/23.1	5.7	33/36	35/40
	RXBH-1724A13C-B	9.4/12.5	3/60	3-4.17	SINGLE	26.1/30.1	5.7	40/45	40/45
	RXBH-1724A15C-B	10.8/14.4	3/60	3-4.8	SINGLE	30/34.7	5.7	45/51	45/60
	RXBH-1724A18C-B	12.8/17.0	3/60	3-5.68	SINGLE	35.6/40.9	5.7	52/59	60/60
	RXBH-24A20C-B	14.4/19.2	3/60	4-4.8	SINGLE	40/46.2	5.7	58/65	60/70
		7.2/9.6	3/60	2-4.8	MULTIPLE CKT 1	20/23.1	5.7	33/36	35/40
		7.2/9.6	3/60	2-4.8	MULTIPLE CKT 2	20/23.1	0	25/29	25/30
	RXBH-24A25C-B	18.0/24.0	3/60	6-4.0	SINGLE	50/57.7	5.7	70/80	70/80
		9.0/12.0	3/60	3-4.0	MULTIPLE CKT 1	25/28.9	5.7	39/44	40/45
		9.0/12.0	3/60	3-4.0	MULTIPLE CKT 2	25/28.9	0	32/37	35/40
	RXBH-24A30C-B	21.6/28.8	3/60	6-4.8	SINGLE	60/69.3	5.7	83/94	90/100
		10.8/14.4	3/60	3-4.8	MULTIPLE CKT 1	30/34.7	5.7	45/51	45/60
		10.8/14.4	3/60	3-4.8	MULTIPLE CKT 2	30/34.7	0	38/44	40/45

? = A/B/C Connection Types
A = Breaker
B = Terminal Block
C = Pullout Disconnect

Electrical Data – With Electric Heat (Con't.)

Air Handler Model	Heater Model Number	Heater kW (208/240V)	Ph/Hz	No. Elements - kW per	Type Supply Circuit Single Circuit Multiple Circuit	Heater Circuit Amps	Tested Blower Motor Amps	Minimum Circuit Ampacity	Maximum Overcurrent Protection
RHMVY6021SEACAJ	RXBH-1724?03J-B	2.3/3.0	1/60	1-3.0	SINGLE	11.1/12.5	5.7	21/23	25/25
	RXBH-1724?05J-B	3.6/4.8	1/60	1-4.8	SINGLE	17.4/20	5.7	29/33	30/35
	RXBH-1724?07J-B	5.4/7.2	1/60	2-3.6	SINGLE	26/30	5.7	40/45	40/45
	RXBH-1724?10J-B	7.2/9.6	1/60	2-4.8	SINGLE	34.7/40	5.7	51/58	60/60
	RXBH-1724A13J-B	9.4/12.5	1/60	3-4.17	SINGLE	45.2/52.1	5.7	64/73	70/80
		3.1/4.2	1/60	1-4.17	MULTIPLE CKT 1	15/17.5	5.7	26/29	30/30
		6.3/8.3	1/60	2-4.17	MULTIPLE CKT 2	30.3/34.6	0	38/44	40/45
	RXBH-1724A15J-B	10.8/14.4	1/60	3-4.8	SINGLE	52/60	5.7	73/83	80/90
		3.6/4.8	1/60	1-4.8	MULTIPLE CKT 1	17.4/20	5.7	29/33	30/35
		7.2/9.6	1/60	2-4.8	MULTIPLE CKT 2	34.7/40	0	44/50	45/50
	RXBH-1724A18J-B	12.8/17.0	1/60	3-5.68	SINGLE	61.6/70.9	5.7	85/96	90/100
		4.3/5.7	1/60	1-5.68	MULTIPLE CKT 1	20.7/23.8	5.7	33/37	35/40
		8.5/11.3	1/60	2-5.68	MULTIPLE CKT 2	40.9/47.1	0	52/59	60/60
	RXBH-24A20J-B	14.4/19.2	1/60	4-4.8	SINGLE	69.3/80	5.7	94/108	100/110
		7.2/9.6	1/60	2-4.8	MULTIPLE CKT 1	34.7/40	5.7	51/58	60/60
		7.2/9.6	1/60	2-4.8	MULTIPLE CKT 2	34.7/40	0	44/50	45/50
	RXBH-24A25J-B	18.0/24.0	1/60	6-4.0	SINGLE	86.6/100	5.7	116/133	125/150
		6.0/8.0	1/60	2-4.0	MULTIPLE CKT 1	28.9/33.4	5.7	44/49	45/50
		6.0/8.0	1/60	2-4.0	MULTIPLE CKT 2	28.9/33.4	0	37/42	40/45
		6.0/8.0	1/60	2-4.0	MULTIPLE CKT 3	28.9/33.4	0	37/42	40/45
	RXBH-24A30J-B	21.6/28.8	1/60	6-4.8	SINGLE	103.9/120	5.7	137/158	150/175
		7.2/9.6	1/60	2-4.8	MULTIPLE CKT 1	34.7/40	5.7	51/58	60/60
		7.2/9.6	1/60	2-4.8	MULTIPLE CKT 2	34.7/40	0	44/50	45/50
		7.2/9.6	1/60	2-4.8	MULTIPLE CKT 3	34.7/40	0	44/50	45/50
	RXBH-17A05C-B	3.6/4.8	3/60	1-4.8	SINGLE	10/11.6	5.7	20/22	20/25
	RXBH-24A05C-B	3.6/4.8	3/60	1-4.8	SINGLE	10/11.6	5.7	20/22	20/25
	RXBH-1724B05C-B	3.6/4.8	3/60	1-4.8	SINGLE	10/11.6	5.7	20/22	20/25
	RXBH-1724A07C-B	5.4/7.2	3/60	2-3.6	SINGLE	15/17.4	5.7	26/29	30/30
	RXBH-1724A10C-B	7.2/9.6	3/60	2-4.8	SINGLE	20/23.1	5.7	33/36	35/40
	RXBH-1724A13C-B	9.4/12.5	3/60	3-4.17	SINGLE	26.1/30.1	5.7	40/45	40/45
	RXBH-1724A15C-B	10.8/14.4	3/60	3-4.8	SINGLE	30/34.7	5.7	45/51	45/60
	RXBH-1724A18C-B	12.8/17.0	3/60	3-5.68	SINGLE	35.6/40.9	5.7	52/59	60/60
	RXBH-24A20C-B	14.4/19.2	3/60	4-4.8	SINGLE	40/46.2	5.7	58/65	60/70
		7.2/9.6	3/60	2-4.8	MULTIPLE CKT 1	20/23.1	5.7	33/36	35/40
		7.2/9.6	3/60	2-4.8	MULTIPLE CKT 2	20/23.1	0	25/29	25/30
	RXBH-24A25C-B	18.0/24.0	3/60	6-4.0	SINGLE	50/57.7	5.7	70/80	70/80
		9.0/12.0	3/60	3-4.0	MULTIPLE CKT 1	25/28.9	5.7	39/44	40/45
		9.0/12.0	3/60	3-4.0	MULTIPLE CKT 2	25/28.9	0	32/37	35/40
	RXBH-24A30C-B	21.6/28.8	3/60	6-4.8	SINGLE	60/69.3	5.7	83/94	90/100
		10.8/14.4	3/60	3-4.8	MULTIPLE CKT 1	30/34.7	5.7	45/51	45/60
		10.8/14.4	3/60	3-4.8	MULTIPLE CKT 2	30/34.7	0	38/44	40/45

? = A/B/C Connection Types
A = Breaker
B = Terminal Block
C = Pullout Disconnect

Electrical Data – With Electric Heat (Con't.)

Air Handler Model	Heater Model Number	Heater kW (208/240V)	Ph/Hz	No. Elements - kW per	Type Supply Circuit Single Circuit Multiple Circuit	Heater Circuit Amps	Tested Blower Motor Amps	Minimum Circuit Ampacity	Maximum Overcurrent Protection
RHMVY6024SEACNJ	RXBH-1724?03J-B	2.3/3.0	1/60	1-3.0	SINGLE	11.1/12.5	5.2	21/23	25/25
	RXBH-1724?05J-B	3.6/4.8	1/60	1-4.8	SINGLE	17.4/20	5.2	29/32	30/35
	RXBH-1724?07J-B	5.4/7.2	1/60	2-3.6	SINGLE	26/30	5.2	39/44	40/45
	RXBH-1724?10J-B	7.2/9.6	1/60	2-4.8	SINGLE	34.7/40	5.2	50/57	50/60
	RXBH-1724A13J-B	9.4/12.5	1/60	3-4.17	SINGLE	45.2/52.1	5.2	63/72	70/80
		3.1/4.2	1/60	1-4.17	MULTIPLE CKT 1	15/17.5	5.2	26/29	30/30
		6.3/8.3	1/60	2-4.17	MULTIPLE CKT 2	30.3/34.6	0	38/44	40/45
	RXBH-1724A15J-B	10.8/14.4	1/60	3-4.8	SINGLE	52/60	5.2	72/82	80/90
		3.6/4.8	1/60	1-4.8	MULTIPLE CKT 1	17.4/20	5.2	29/32	30/35
		7.2/9.6	1/60	2-4.8	MULTIPLE CKT 2	34.7/40	0	44/50	45/50
	RXBH-1724A18J-B	12.8/17.0	1/60	3-5.68	SINGLE	61.6/70.9	5.2	84/96	90/100
		4.3/5.7	1/60	1-5.68	MULTIPLE CKT 1	20.7/23.8	5.2	33/37	35/40
		8.5/11.3	1/60	2-5.68	MULTIPLE CKT 2	40.9/47.1	0	52/59	60/60
	RXBH-24A20J-B	14.4/19.2	1/60	4-4.8	SINGLE	69.3/80	5.2	94/107	100/110
		7.2/9.6	1/60	2-4.8	MULTIPLE CKT 1	34.7/40	5.2	50/57	50/60
		7.2/9.6	1/60	2-4.8	MULTIPLE CKT 2	34.7/40	0	44/50	45/50
	RXBH-24A25J-B	18.0/24.0	1/60	6-4.0	SINGLE	86.6/100	5.2	115/132	125/150
		6.0/8.0	1/60	2-4.0	MULTIPLE CKT 1	28.9/33.4	5.2	43/49	45/50
		6.0/8.0	1/60	2-4.0	MULTIPLE CKT 2	28.9/33.4	0	37/42	40/45
		6.0/8.0	1/60	2-4.0	MULTIPLE CKT 3	28.9/33.4	0	37/42	40/45
	RXBH-24A30J-B	21.6/28.8	1/60	6-4.8	SINGLE	103.9/120	5.2	137/157	150/175
		7.2/9.6	1/60	2-4.8	MULTIPLE CKT 1	34.7/40	5.2	50/57	50/60
		7.2/9.6	1/60	2-4.8	MULTIPLE CKT 2	34.7/40	0	44/50	45/50
		7.2/9.6	1/60	2-4.8	MULTIPLE CKT 3	34.7/40	0	44/50	45/50
	RXBH-17A05C-B	3.6/4.8	3/60	1-4.8	SINGLE	10/11.6	5.2	19/21	20/25
	RXBH-24A05C-B	3.6/4.8	3/60	1-4.8	SINGLE	10/11.6	5.2	19/21	20/25
	RXBH-1724B05C-B	3.6/4.8	3/60	1-4.8	SINGLE	10/11.6	5.2	19/21	20/25
	RXBH-1724A07C-B	5.4/7.2	3/60	2-3.6	SINGLE	15/17.4	5.2	26/29	30/30
	RXBH-1724A10C-B	7.2/9.6	3/60	2-4.8	SINGLE	20/23.1	5.2	32/36	35/40
	RXBH-1724A13C-B	9.4/12.5	3/60	3-4.17	SINGLE	26.1/30.1	5.2	40/45	40/45
	RXBH-1724A15C-B	10.8/14.4	3/60	3-4.8	SINGLE	30/34.7	5.2	44/50	45/50
	RXBH-1724A18C-B	12.8/17.0	3/60	3-5.68	SINGLE	35.6/40.9	5.2	51/58	60/60
	RXBH-24A20C-B	14.4/19.2	3/60	4-4.8	SINGLE	40/46.2	5.2	57/65	60/70
		7.2/9.6	3/60	2-4.8	MULTIPLE CKT 1	20/23.1	5.2	32/36	35/40
		7.2/9.6	3/60	2-4.8	MULTIPLE CKT 2	20/23.1	0	25/29	25/30
	RXBH-24A25C-B	18.0/24.0	3/60	6-4.0	SINGLE	50/57.7	5.2	69/79	70/80
		9.0/12.0	3/60	3-4.0	MULTIPLE CKT 1	25/28.9	5.2	38/43	40/45
		9.0/12.0	3/60	3-4.0	MULTIPLE CKT 2	25/28.9	0	32/37	35/40
	RXBH-24A30C-B	21.6/28.8	3/60	6-4.8	SINGLE	60/69.3	5.2	82/94	90/100
		10.8/14.4	3/60	3-4.8	MULTIPLE CKT 1	30/34.7	5.2	44/50	45/50
		10.8/14.4	3/60	3-4.8	MULTIPLE CKT 2	30/34.7	0	38/44	40/45

? = A/B/C Connection Types
A = Breaker
B = Terminal Block
C = Pullout Disconnect

Electrical Wiring

Power Wiring

- Field wiring must comply with the National Electrical Code (C.E.C. in Canada) and any applicable local ordinance.
- Supply wiring must be 75°C minimum copper conductors only.
- See electrical data for product Ampacity rating and Circuit Protector requirement.

Grounding

- This product must be sufficiently grounded in accordance with National Electrical Code (C.E.C. in Canada) and any applicable local ordinance.
- A grounding lug is provided.

Accessories

- **Combustible Floor Base RXHB-**

Model Cabinet Size	Combustible Floor Base Model Number
17	RXHB-17
21	RXHB-21
24	RXHB-24

- **Jumper Bar Kit 3 Ckt. to 1 Ckt. RXBJ-A31** is used to convert single phase multiple three circuit units to a single supply circuit. Kit includes cover and screw for line side terminals.
- **Jumper Bar Kit 2 Ckt. to 1 Ckt. RXBJ-A21** is used to convert single phase multiple two circuit units to a single supply circuit. Kit includes cover and screw for line side terminals.
- **Note:** No jumper bar kit is available to convert three phase multiple two circuit units to a single supply circuit.

- **Auxiliary Horizontal Overflow Pan Accessory RXBM-**

Nominal Cooling Capacity-Tons	Auxiliary Horizontal Overflow Pan Accessory Model Number
2 - 3	RXBM-AC48
4 - 5	RXBM-AC61

- **Supply and Return Air Sensor Kit RXHT-A02**
  The RXHT-A02 Thermistor Kit is to be used with the air handler control to monitor the system return and leaving air temperatures. These temperatures can be monitored with the EcoNet communicating thermostat.

- **Auxiliary Electric Heater Kits RXBH-**
  Heater Kits include circuit breakers which meet UL and cUL requirements for service disconnect. See the Electric Heat Electrical Data in this specification sheet for specific Heater Kit Model numbers.

- **Horizontal Adapter Kit RXHH-**
  This horizontal adapter kit is used to convert Upflow/Downflow only models to horizontal flow. See the following table to order proper horizontal adapter kit.

Coil Model	Horizontal Adapter Kit Model Number (Single Qty.)	Horizontal Adapter Kit Model Number (10-Pack Qty.)
2414	RXHH-A01	RXHH-A01 x 10
2417	RXHH-A02	RXHH-A02 x 10
2421/3617/3621	RXHH-A03	RXHH-A03 x 10
4821/4824/6021	RXHH-A06	RXHH-A06 x 10
6024	RXHH-A05	RXHH-A05 x 10

- **External Filter Base RXHF-**

Model Cabinet Size	Filter Size In. [mm]	Part Number*	A	B
17	16 x 20 [406 x 508]	RXHF-17	15.70	17.5
21	20 x 20 [508 x 508]	RXHF-21	19.20	21.0
24	25 x 20 [635 x 508]	RXHF-24	22.70	25.5

*Accommodates 1" or 2" filter

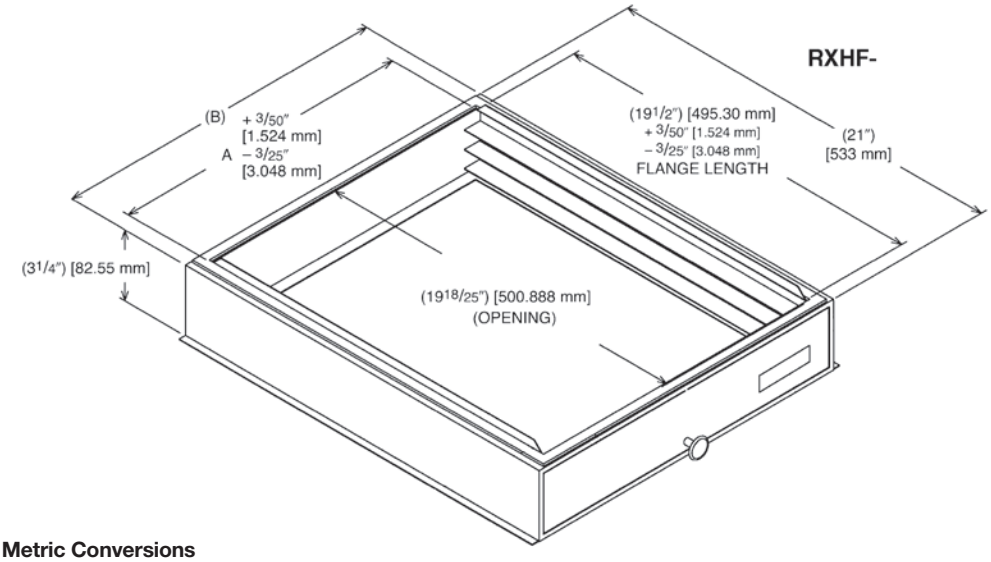

[ ] Designates Metric Conversions

engineered for life™

GENERAL TERMS OF LIMITED WARRANTY*

Rheem® will furnish a replacement for any part of this product which fails in normal use and service within the applicable periods stated, in accordance with the terms of the limited warranty.

Parts ..... Ten (10) Years

***For complete details of the Limited and Conditional Warranties, including applicable terms and conditions, contact your local contractor or the Manufacturer for a copy of the product warranty certificate.**

Before proceeding with installation, refer to installation instructions packaged with each model, as well as complying with all Federal, State, Provincial, and Local codes, regulations, and practices.

© 2026 Rheem Manufacturing Company. Trademarks are property of their respective owners.

In keeping with its policy of continuous progress and product improvement, manufacturer reserves the right to make changes without notice.

5600 Old Greenwood Road
Fort Smith, Arkansas 72908 • Rheem.com

125 Edgeware Road, Unit 1
Brampton, Ontario • L6Y 0P5 • Rheem.ca

5/26 FORM NO. H11-593 REV. 1