PERFORMANCE PLATINUM™

PERFORMANCE PLATINUM™ Hybrid Electric Heat Pump with Ultra Low GWP

Efficiency

- High 3.83 - 4.07 UEF reduces operating cost
- ENERGY STAR® certified

Performance

- Delivers hot water faster than most standard electric water heaters – 60-87 gallons first-hour delivery, depending on model
- Ambient operating range: 37-145° F is widest in class, offering more heat pump operation annually; designed to meet Northern Climate Spec (Tier 4)
- Quiet Operation

Easy Installation

- Universal top and side water connections
- Quick access to electrical junction box
- Duct ready design
- Easily replaces a standard electric water heater

Integration

- Electronic control for easy temperature adjustment and mode management
- Audible alarm for service alerts
- Built-in Wi-Fi powered by EcoNet®* and free mobile app gives users control over water heater, allowing for customizable temperature, vacation settings, energy savings and system monitoring at home or away.
- Demand Response Ready with built-in EcoPort™ (CTA-2045 Port)
- **Easily add leak detection and prevention with the leak sensor and shutoff valve kit (part# SP21265A sold separately)**

Operation Modes

- Energy Saver
- Heat Pump
- High Demand
- Electric
- Vacation/Away: 2-28 days (or placed on hold indefinitely)

Plus…

- This equipment contains refrigerant R-1234yf, which complies with New York State regulations (NYCRR Part 494)
- Premium grade anode rod extends the life of the tank
- Dip tube diffuser reduces sediment improving efficiency and tank life
- 3/4" NPT water inlet and outlet; 3/4" condensate drain connections
- Incoloy stainless steel resistor elements
- Dry-fire protection
- Easy access, top mounted washable air filter
- 2" Non-CFC foam insulation
- Enhanced flow brass drain valve
- Temperature and pressure relief valve installed
- Design certified to NSF/ANSI 372 (Lead Content)
- QMID: K3A8

Warranty

- 10-Year limited warranty for tank and parts, 1-year full in-home labor warranty
  See Residential Warranty Certificate for complete information

Units meet or exceed ANSI requirements and have been tested according to D.O.E. procedures. Units meet or exceed the energy efficiency requirements of NAECA, ASHRAE standard 90, ICC Code and all state energy efficiency performance criteria.

**Wi-Fi broadband internet connection required*



PERFORMANCE PLATINUM
Hybrid Electric Heat Pump
40, 50, 65 and 80-Gallon Capacities
208-240 Volt / 1 PH
30 Amp

EcoNet®

Electric

LEED Points = 3

See specifications chart on back.

PERFORMANCE PLATINUM™ Hybrid Electric Heat Pump Specifications

Fuel Type	Desc.	Nominal Gallon Cap.	Rated Gallon Cap.	Model Number	Electric Breaker Size	Uniform Energy Factor (UEF)	Element Wattage	Compressor BTU/h	Fan CFM	First Hr. Rating (Gallons)	Recovery in G.P.H. 90° F Rise	Tank Height A	Diam. B	Ht. to Cold Inlet & Drain Valve	Ht. to Hot Outlet & T&P	Unit Wt. (LBS.)	Approx. Ship Wt. (LBS.)
30 AMPS																	
Electric	Tall	40	36	XE40T10HZ45U1	30	3.83	4,500	4200	150	60	27	63"	20-1/4"	3-5/8"	39-5/8"	166	184
Electric	Tall	50	45	XE50T10HZ45U1	30	3.88	4,500	4200	150	67	27	62"	22-1/4"	3-5/8"	39-5/8"	185	203
Electric	Tall	65	59	XE65T10HZ45U1	30	4.05	4,500	4200	150	75	27	65"	24-1/4"	3-7/8"	42-3/8"	245	289
Electric	Tall	80	72	XE80T10HZ45U1	30	4.07	4,500	4200	150	87	27	75"	24-1/4"	3-7/8"	42-3/8"	261	306

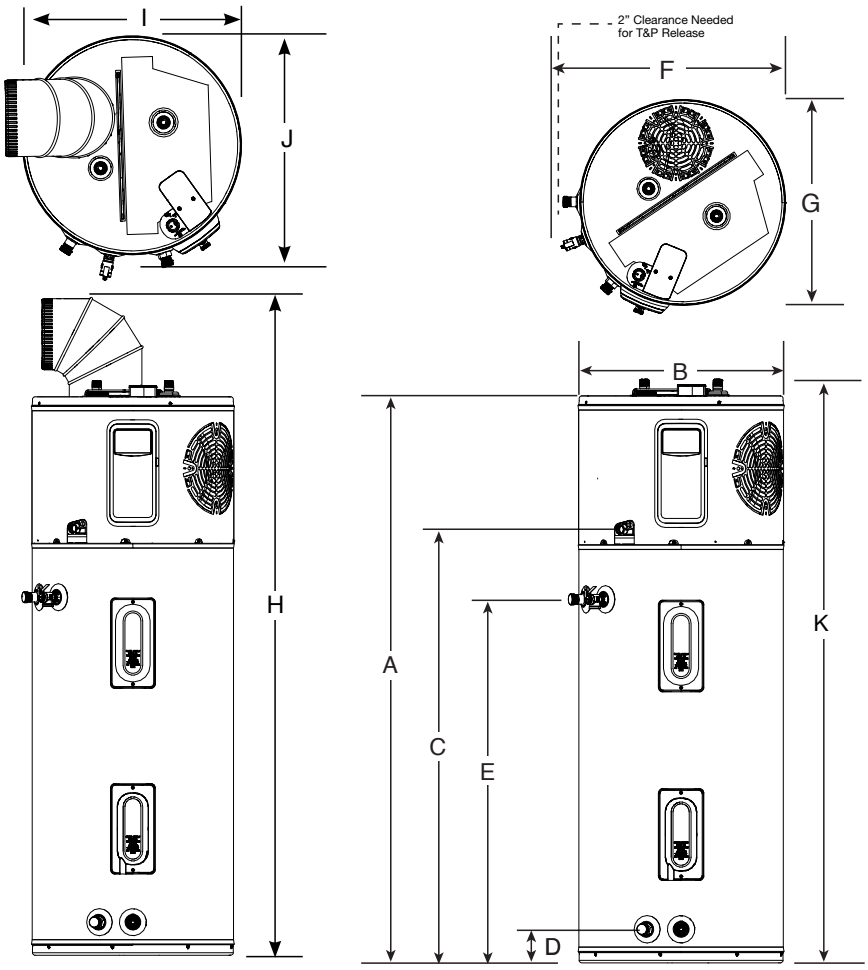

DESCRIPTION		DIMENSIONS (SHOWN IN INCHES)										
NOMINAL GALLON CAPACITY	MODEL NUMBER	A	B	C	D	E	F	G	H	I	J	K
40	XE40T10HZ45U1	62-5/16	20-1/4	47	3-5/8	39-5/8	23-3/8	20-1/2	78-7/8	20-1/4	23-1/4	64-15/16
50	XE50T10HZ45U1	61-3/4	22-1/4	47	3-5/8	39-5/8	25-3/8	22-1/2	78-5/8	22-1/4	25-9/16	64-3/8
65	XE65T10HZ45U1	64-3/16	24-1/4	49	3-7/8	42-3/8	27-1/2	24-5/8	81-1/8	24-1/4	27-3/8	66-13/16
80	XE80T10HZ45U1	74-3/16	24-1/4	59	3-7/8	42-3/8	27-1/2	24-5/8	91	24-1/4	27-3/8	76-13/16

Hybrid Electric Heat Pump Water Heater Installation Guidelines to Provide Optimal Efficiency

PLEASE NOTE: *For all non-ducted applications, ensure that the air exhaust vent is oriented to be at least 6" from any walls or solid surfaces to ensure proper dissipation of cooled air.*

Heater: Not Ducted

Room size: Larger than 700 ft^3 (e.g. 7' x 10' x 10').

Requirements:
No additional ventilation needed

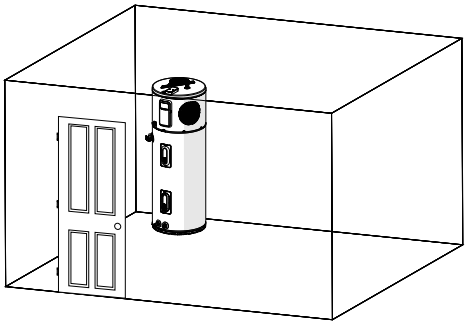

Heater: Not Ducted

Room size: Smaller than 700 ft^3 (e.g. 7' x 10' x 10').

Requirements:
Full louvered door OR two louvers top and bottom[1]

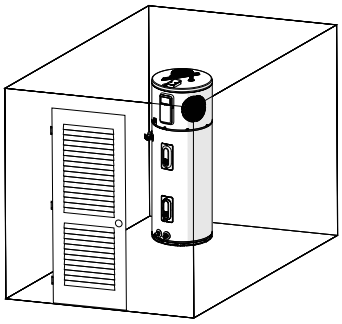

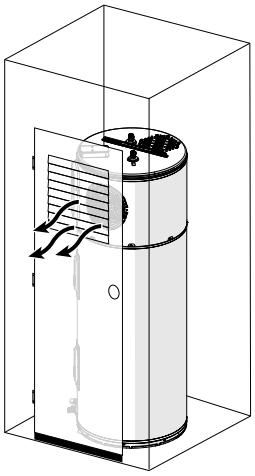

Heater: Not Ducted

Room: Small Closet

Requirements:

- Air gap under door equal to 18 in^2 (0.75" clearance)
- Louver must be located the same height on door as the air exhaust on heater
- Heater air exhaust must be positioned towards louverwithin one foot of door

---

Heater: Ducted With Inlet or Outlet Duct

Room size:
For all closet installations (size smaller than 400 ft^3)

Requirements:
Full louvered door[2]

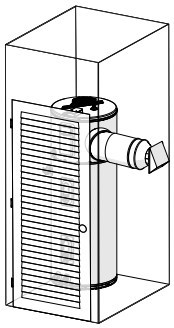

Heater: Ducted With Inlet and Outlet Duct

Room size:
Any size room

Requirements:
No additional ventilation needed

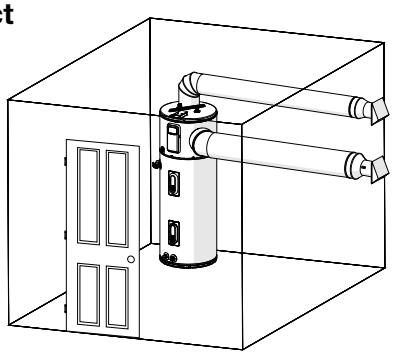

MINIMUM CLEARANCES (WITHOUT DUCTING)		
REAR	**SIDES**	**TOP**
0"	0"	6"

FOR EASIER SERVICEABILITY		
REAR	**SIDES**	**TOP**
6"	6"	6"

PLEASE NOTE: *Heat pump water heater will operate in rooms less than 700 ft^3 down to 450 ft^3 but at reduced energy efficiency and reduced performance output. Reduced energy efficiency and performance has not been evaluated by Rheem Manufacturing and not recommended for optimal performance of the unit.*

[1]*Minimum louver free opening area required for not ducted room installation application will be 3.25 sq ft.*
[2]*Minimum louver free opening area required for ducted closet installation application will be 2.9 sq ft.*

Hybrid Electric Heat Pump Accessories List

PART NUMBER	DESCRIPTION	USE FOR
AP19134	Leak Sensor	Automatic detection of internal and external leaks
AS50618A	Shutoff Valve	Automatic shut off of water supply to unit
SP20883	Vibration Isolation Kit	Installation on non-concrete floors
SP20884	8" Diameter UL Certified Termination Kit	Termination to the outside or to the attic with 8" diameter
SP20885	7" Diameter UL Certified Termination Kit	Termination to the outside or to the attic with 7" diameter
SP20886	6" Diameter UL Certified Termination Kit	Termination to the outside or to the attic with 6" diameter
SP20887	5" Diameter UL Certified Termination Kit	Termination to the outside or to the attic with 5" diameter
SP20888	8" Collar for Flex Venting	Exhaust only to the outside ducting configuration (no inlet duct)
SP20889	25' Flexible 8" Diameter Duct Kit	For up to 25' of ducting
SP20890	8" Rigid Elbow Duct Kit	Installation in tight places where space needs to be minimized
SP20882	Earthquake Isolation Kit	Metal band restraints for installation in seismic regions
FR-80	Little Firefighter Water Heater Front Restraint	High strength soft woven restraints for installation in seismic regions
AP23528	Duct Diverter	Allows for seasonal flexibility in ducting cool exhaust air
UPGRADE KIT		
SP21265A	Kit - Automatic Shutoff Valve Assembly	Add leak detector, shutoff valve and S.O.V extension harness for top connection setup

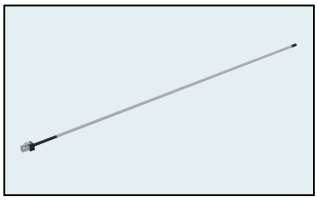
Leak Sensor


Shutoff Valve

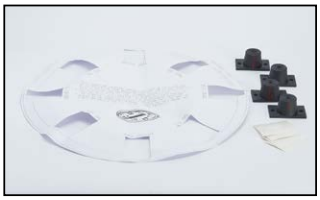
Vibration Isolation Kit

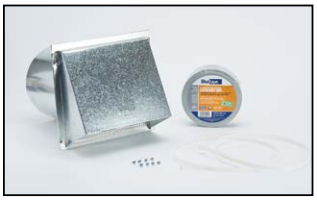
8" Diameter UL Certified Termination Kit


7" Diameter UL Certified Termination Kit


6" Diameter UL Certified Termination Kit


5" Diameter UL Certified Termination Kit


8" Collar for Flex Venting


25' Flexible 8" Diameter Duct Kit


8" Rigid Elbow Duct Kit

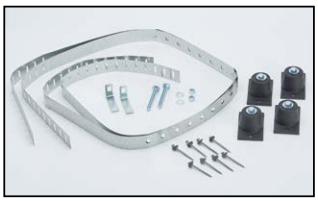
Earthquake Isolation Kit


FR-80

UPGRADE KIT (for ProTerra models without LeakGuard™ only) – Add leak detector and shutoff valve to protect from water damage

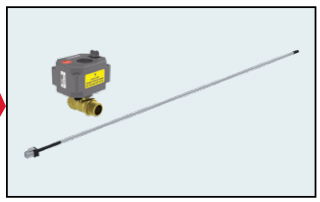
Leak Sensor & Shutoff Valve Kit


AP23528

In keeping with its policy of continuous progress and product improvement, Rheem reserves the right to make changes without notice.